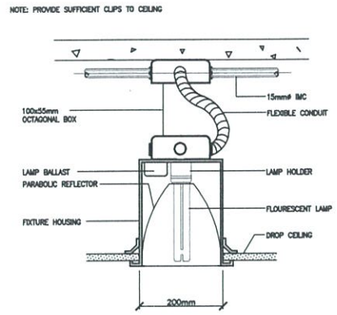

PINLIGHT MOUNTING DETAIL
SCALE: 1:40mm

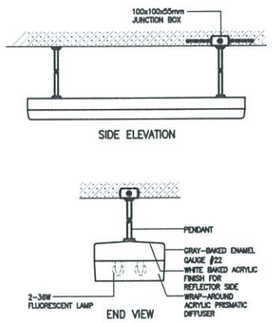

LIGHTING FIXTURE MOUNTING DETAIL (SUSPENDED)
SCALE: 1:40mm

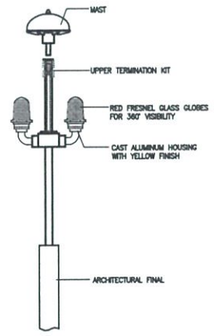

OBSTRUCTION LIGHTING DETAIL
SCALE: 1:40mm

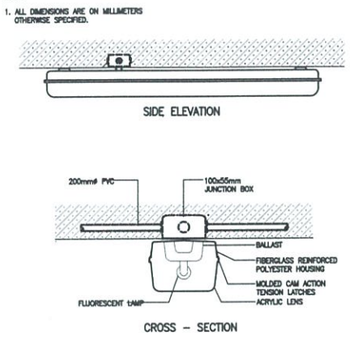

LIGHTING FIXTURE MOUNTING DETAIL (SURFACE MOUNTED)
SCALE: 1:40mm

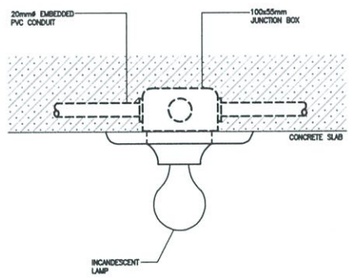

SURFACE MOUNTED INCANDESCENT LAMP DETAIL
SCALE: 1:40mm

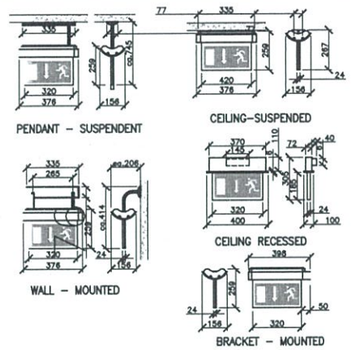

EXIT LIGHT MOUNTING DETAIL
SCALE: 1:40mm

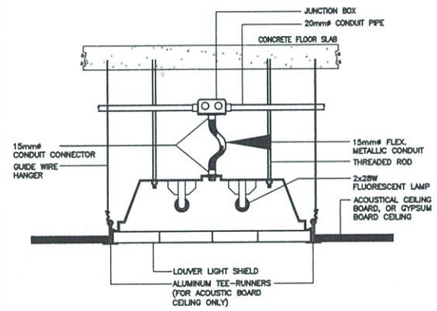

2x20W RECESSED FLUORESCENT LAMP MOUNTING DETAIL
SCALE: 1:40mm

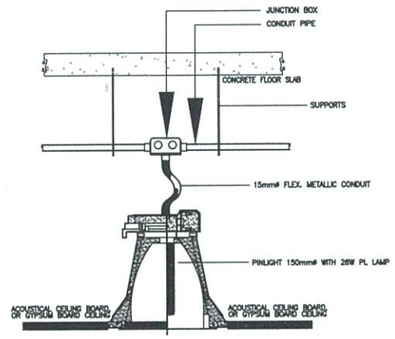

PINLIGHT MOUNTING DETAIL
SCALE: 1:40mm

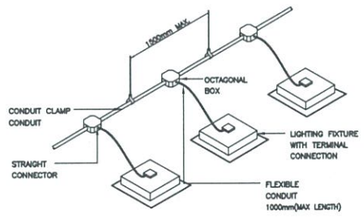

NOTE:
PROVIDE BLANK COVER ON ALL JUNCTION BOXES

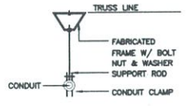

CONDUIT RUN FOR LIGHTING DISTRIBUTION IN ONE CIRCUIT (FOR EXPOSED OF DROP CEILING INSTALLATION)
SCALE: 1:40mm

WALL-MOUNTED EXIT LIGHTING FIXTURE

CEILING-MOUNTED EXIT LIGHTING FIXTURE

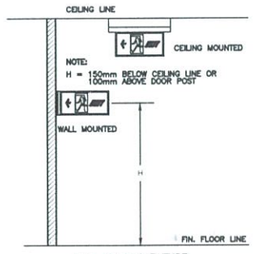

EXIT LIGHTING FIXTURE MOUNTING DETAIL

EXIT LIGHTING FIXTURE DETAIL
SCALE: 1:40mm

FOR APPROVAL PLANS OF REGIONAL TVET INNOVATION CENTERS (RTICs) 2023

PROJECT OWNER:	PROJECT TITLE:	ELECTRICAL ENGINEER:	PROJECT MANAGER:	PROJECT DIRECTOR:	SHEET CONTENTS:	SHEET NO.
TECHNICAL EDUCATION AND SKILLS DEVELOPMENT AUTHORITY MAIN OFFICE ADDRESS: TESDA COMPLEX, East Service Road SLEX, Taguig City	PROPOSED TESDA RTC-BATANGAS INNOVATION CENTER LOCATION: P. HERRERA ST. POBLACION 006 BATANGAS CITY	ENGR. JOHN ADRIAN C. SANTOS PMU-SIPTVETS ENGINEERING SECTION	DIR. ENRICO C. BATARIO PMU-SIPTVETS	SEC. SUHARTO T. MANGUDADATU, Ph.D. PMU-SIPTVETS	MISCELLANEOUS DETAILS - TYPICAL LIGHTING DETAILS	E-6

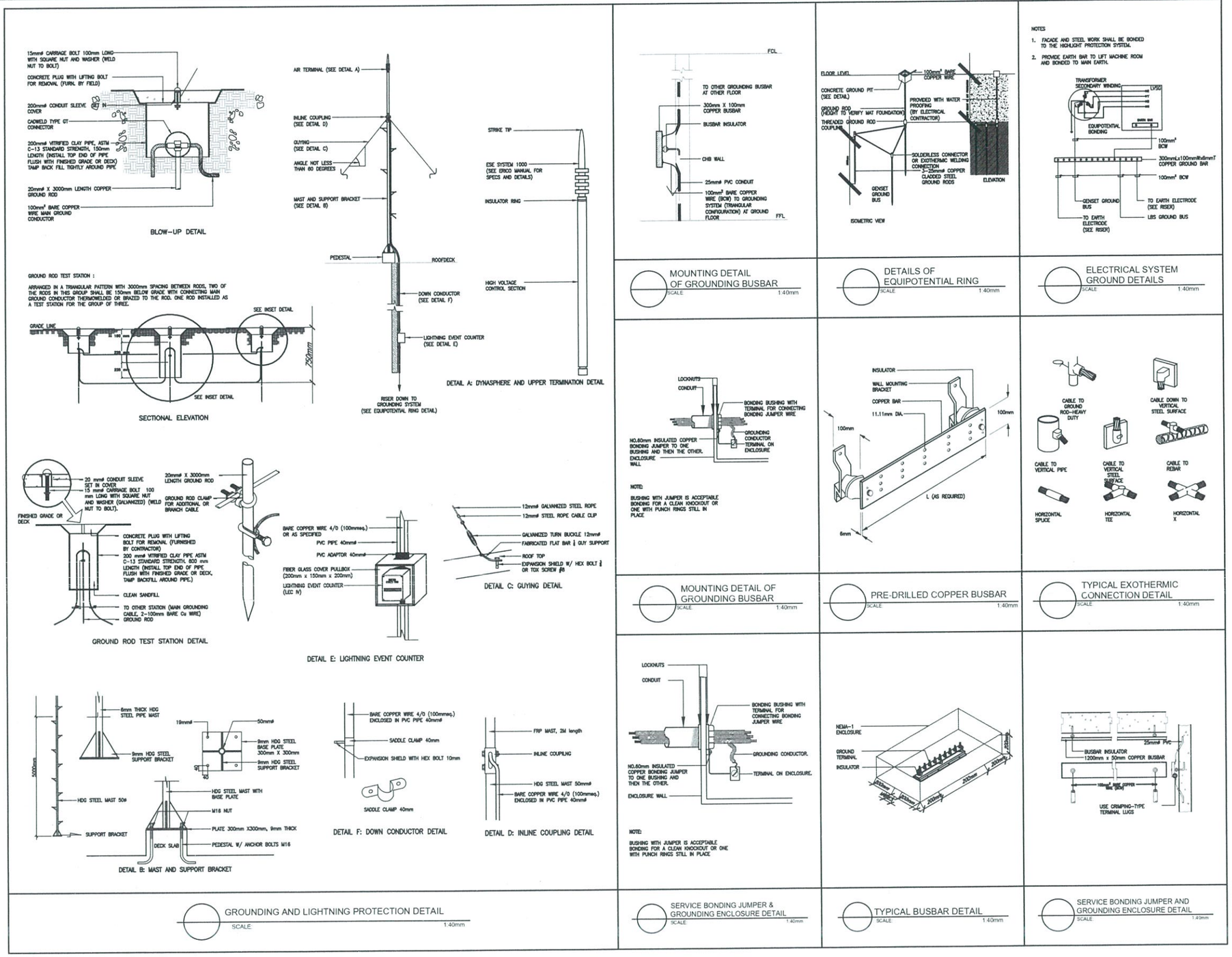

FOR APPROVAL PLANS OF REGIONAL TVET INNOVATION CENTERS (RTICs) 2023	PROJECT OWNER: TECHNICAL EDUCATION AND SKILLS DEVELOPMENT AUTHORITY MAIN OFFICE ADDRESS: TESDA COMPLEX, East Service Road SLEX, Taguig City	PROJECT TITLE: PROPOSED TESDA RTC-BATANGAS INNOVATION CENTER LOCATION: P. HERRERA ST. POBLACION 306, BATANGAS CITY	ELECTRICAL ENGINEER: ENGR. JOHN ADRIAN C. SANTOS, PMU-SIPTVETS ENGINEERING SECTION	PROJECT MANAGER: DIR. ENRICO C. BANARIO, PMU-SIPTVETS	PROJECT DIRECTOR: SEC. SUHARTO T. MANGUDADATU, Ph.D., PMU-SIPTVETS	SHEET CONTENTS: MISCELLANEOUS DETAILS - TYPICAL GROUNDING AND LIGHTNING PROTECTION DETAILS SHEET NO. E-7

GENERAL NOTES AND SPECIFICATIONS

1. ALL WORKS HEREIN INCLUDED SHALL BE EXECUTED IN ACCORDANCE WITH THE PROVISION OF THE LATEST EDITION OF THE PHILIPPINE ELECTRICAL CODE, THE RULES AND REGULATIONS OF THE LOCALITY AND THE REQUIREMENTS OF THE CLIENT/OWNER.
2. ALL WORKS HEREIN INCLUDED SHALL BE EXECUTED BY EXPERIENCED MEN UNDER THE DIRECT SUPERVISION OF A FULL TIME LICENSED ELECTRONICS AND COMMUNICATIONS ENGINEER (ECE). ALL WORKS SHALL BE NEATLY PLACED, SECURELY FASTENED AND PROPERLY FINISHED.
3. MATERIALS SHALL BE NEW AND SHALL CONFORM WITH THE STANDARD AMERICAN UNDERWRITER'S LABORATORIES, INC., IN EVERY CASE WERE SUCH A STANDARD HAS BEEN ESTABLISHED FOR THE PARTICULAR TYPE OF MATERIAL IN QUESTION. ALL EQUIPMENT SHALL BE PURCHASED ACCORDING TO SPECIFICATIONS.
4. ALL EXPOSED & CEILING CONCEALED CONDUITS SHALL BE OF INTERMEDIATE METALLIC CONDUIT ON HIGH STRENGTH AND GALVANIZED WITH AN ADDITIONAL INTERIOR PROTECTIVE COATING SHALL BE USED OR AS INDICATED IN THE PLANS. ALL EMBEDDED CONDUITS SHALL BE OF POLYVINYL CHLORIDE. ALL EXPOSED AND NOT PRONE TO DAMAGE CONDUITS SHALL BE OF ELECTRICAL METALLIC TUBING.
5. VOICE AND DATA WIRING SHALL BE SEPARATED FROM ANY OTHER BUILDING OR POWER WIRING, TO PREVENT HUMMING AND ELECTROMAGNETIC INTERFERENCE (EMI), TO MEET OR EXCEED THE EIA/TIA 568A CABLING STANDARD.
5. ALL CONDUITS AND WIRE WAYS SHALL BE PROTECTED AGAINST DAMAGES BY THE ENTRANCE OF WATER AND FOREIGN MATTER DURING CONSTRUCTION. ALL ENDS OF CONDUITS SHALL BE PROPERLY PLUGGED TO EXCLUDE MOISTURE AND DUST IMMEDIATELY AFTER THE CONDUITS ARE PLACED.
7. ALL CONDUIT BENDS SHALL BE FIELD-MADE USING HYDRAULIC BENDERS. MINIMUM BENDING RADIUS SHALL BE IN ACCORDANCE WITH THE CODE.
8. ALL PIPES AND FITTINGS ON EXPOSED WORK SHALL BE SUPPORTED AND SECURED BY MEANS OF C-CHANNELS AND CLAMPS.
9. THE POSITION OF ALL ELECTRONICS EQUIPMENT AS SHOWN IN THE DRAWINGS ARE APPROXIMATE ONLY. THE EXACT POSITIONS SHALL BE DETERMINED ON SITE.
10. ALL MDF'S AND IDF'S SHALL BE CONSTRUCTED IN ACCORDANCE WITH THE LATEST EDITION PF PHILIPPINE ELECTRICAL/ELECTRONICS, EIA AND BICSI CODE. THEY SHALL BE PAINTED WITH A COAT OF ANTI-RUST PAINT AND TWO COATS OF SEMI-GLASS TEAK PAINT OF BEST QUALITY TO THE APPROVAL OF THE CONSULTANT.
11. ALL ELECTRONICS EQUIPMENT AND DEVICES LOCATIONS SHOWN ARE INDICATIVE ONLY AND THE ELECTRICAL CONTRACTOR MUST COORDINATE WITH THE ARCHITECT AND OR THE INTERIOR DESIGNER, AS WELL AS EQUIPMENT SUPPLIERS.
12. ALL ELECTRONICS EQUIPMENT & ACCESSORIES THAT ARE EXPOSED OR LESS THAN 2.0m AWAY FROM WATER SOURCES SHALL BE OF WATERPROOF TYPE.
13. COLOR FOR ALL TELECOMMUNICATION FACE PLATES SHALL BE AS PER ARCHITECT'S/INTERIOR DESIGNER'S SELECTION.
14. SIZING OF ALL PULLBOXES SHALL BE COMPUTED BASED ON THE CODE REQUIREMENTS. SUBMIT SHOP DRAWINGS TO THE ENGINEER FOR APPROVAL PRIOR TO FABRICATION. LOCATION OF PULLBOXES SHALL BE AS APPROVED BY THE ARCHITECT/ENGINEER AND MUST BE REFLECTED ON THE "AS-BUILT" PLANS.
15. MOUNTING HEIGHTS OF DEVICES (RJ-45 JACKS) SHALL BE AS APPROVED BY THE ARCHITECT OR AS FOLLOWS:

    TELECOM/DATA OUTLET .....0.30m ABOVE FINISHED FLOOR TO CENTER OF DEVICE
    0.15m ABOVE WORKING COUNTER TO CENTER OF DEVICE

16. ALL ITEMS OF MATERIAL NOT FURNISHED BY REQUISITION AND REQUIRED TO COMPLETE THE INSTALLATION IN A GOOD, WORKMANLIKE MANNER SHALL BE PROVIDED BY THE IT CABLING CONTRACTOR.
17. THE PLANS AS DRAWN ARE BASED UPON THE ARCHITECTURAL PLANS AND THE DETAILS AND SHOWN CONDITIONS AS ACCURATELY AS IT IS POSSIBLE TO INDICATE THEM IN SCALE. THE PLANS ARE DIAGRAMMATICAL AND DO NOT NECESSARILY SHOW ALL FITTINGS NECESSARY TO FIT TO THE BUILDING CONDITIONS. THE LOCATIONS OF OUTLETS, APPARATUS AND APPLIANCE SHOWN ON THE PLANS ARE APPROXIMATE. THE CONTRACTOR SHALL BE HELD RESPONSIBLE FOR THEIR PROPER LOCATION IN ORDER TO MAKE THEM FIT WITH THE ARCHITECTURAL DETAILS AND INSTRUCTIONS FROM THE ENGINEER'S REPRESENTATIVE AT THE SITE.
18. UPON COMPLETION OF IT CABLING WORKS, THE FOLLOWING TESTS SHALL BE PERFORMED BY THE CONTRACTOR INCLUSIVE OF THE INSTALLATION TO BE REPORTED IN DETAILS AND IN FORMS APPROVED BY THE OWNERS REPRESENTATIVE;

    A. SIGNAL ATTENUATION TEST
    B. CONTINUITY TEST
    C. NEAR-END CROSSTALK TEST
    D. IMPEDANCE TEST
    E. RESISTANCE TEST
    F. WIRE MAP TEST

ABBREVIATIONS

ACP	ACCESS CONTROL PANEL
ACS	ACCESS CONTROL SYSTEM
BGM	BACKGROUND MUSIC
C	CONDUIT
CAT	CATEGORY
CDP	COMMUNICATION DISTRIBUTION PANEL
CATV	COMMUNITY ANTENNA TELEVISION
CCTV	CLOSED CIRCUIT TELEVISION
DC	DOOR CONTACT
DOL	DIRECT ON LINE
EMT	ELECTROMETALLIC TUBING
ELV	EXTRA LOW VOLTAGE
EVAC	EMERGENCY VOICE ALARM COMMUNICATION
FA	FIRE ALARM
FR	FIRE RATED
NVR	NETWORK VIDEO RECORDER
PVC	POLYVINYL CHLORIDE
PATB	PUBLIC ASDRESS TERMINAL BOARD
TEL	TELEPHONE
TTC	TELEPHONE TERMINAL CABINET
THHN	THERMOPLASTIC HEAT RESISTANT (90°C) WITH NYLON JACKET
FCC	FIRE COMMAND CENTER
FACP	FIRE ALARM CONTROL PANEL
FATB	FIRE ALARM TERMINAL BOARD
FDAS	FIRE ALARM AND DETECTION SYSTEM
IDF	INTERMEDIATE DISTRIBUTION FRAME
IMC	INTERMEDIATE METALLIC CONDUIT
NAP	NETWORK ACCESS POINT
ODF	OPTICAL DISTRIBUTION FRAME
PA	PUBLIC ASDRESS
RD	RISER DOWN
RU	RISER UP
RSC	RIGID STEEL CONDUIT
SMS	SECURITY MANAGEMENT SYSTEM
TX	TRANSFORMER
THW	THERMOPLASTIC HEAT AND MOISTURE RESISTANT
TYP	TYPICAL
UPS	UNINTERRUPTIBLE POWER SUPPLY
WP	WEATHER PROOF
FDB	FIBER DISTRIBUTION BOARD

AUXILIARY SYSTEMS LEGEND AND SYMBOL

SYMBOLS	DESCRIPTION
	DOME-TYPE, IP-BASED CCTV CAMERA
	IP BASED CAMERA, FIXED TYPE, WEATHER PROOF
	VOICE/DATA OUTLET
	FLOOR MOUNTED VOICE/DATA OUTLET
	INPUT MODULE
	GROUND BAR
	SMOKE DETECTOR
	HEAT DETECTOR
	STROBE LIGHT WITH SOUNDER
	MANUAL PULL STATION
	FIREMAN'S TELEPHONE JACK
	HORN TYPE SPEAKER
	CEILING-MOUNTED SPEAKER
	INTERCOM UNIT
	FIRE ALARM CONTROL PANEL
RU/RD	RISER UP/DOWN
	PA MICROPHONE

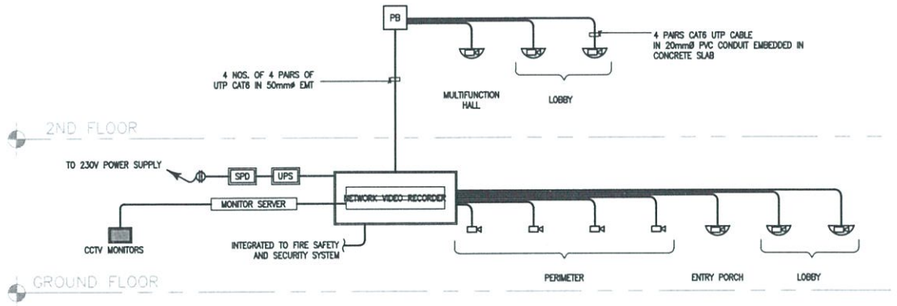

CCTV SINGLE LINE DIAGRAM
SCALE: NTS

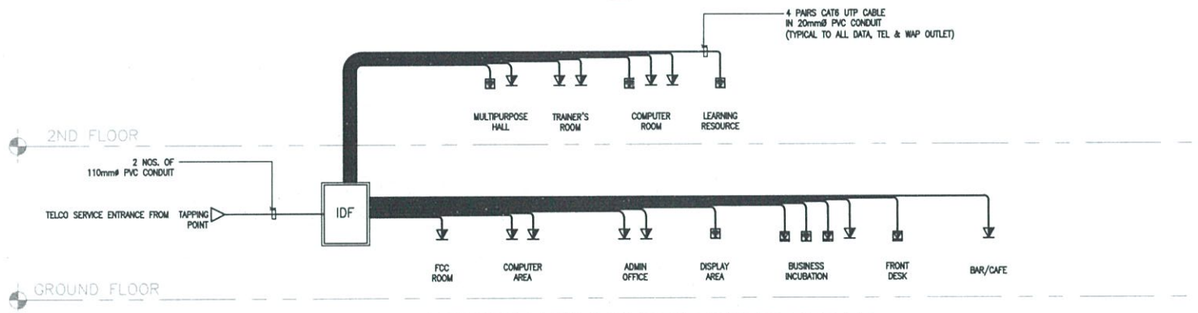

VOICE/DATA SINGLE LINE DIAGRAM
SCALE:

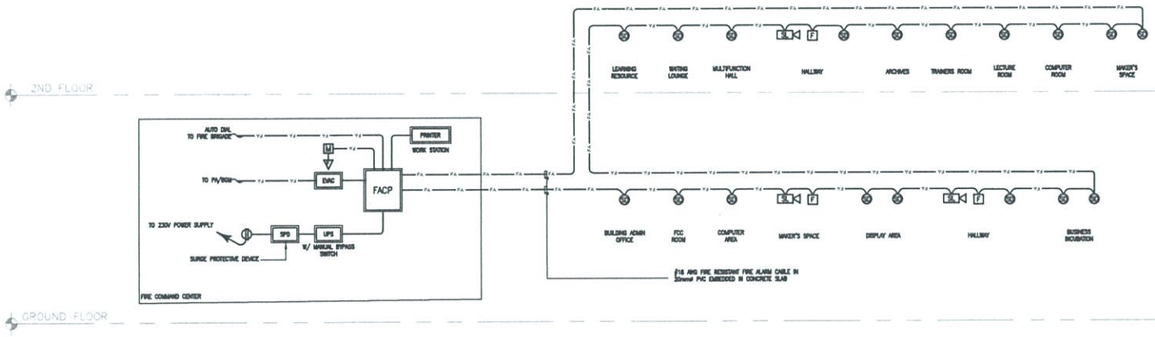

FDAS SINGLE LINE DIAGRAM
SCALE: NTS

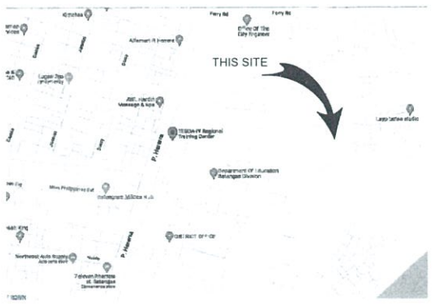

LOCATION MAP
SCALE: NTS

VICINITY MAP
SCALE: NTS

FOR APPROVAL PLANS OF REGIONAL TVET INNOVATION CENTERS (RTICs) 2023	PROJECT OWNER: TECHNICAL EDUCATION AND SKILLS DEVELOPMENT AUTHORITY MAIN OFFICE ADDRESS: TESDA COMPLEX, East Service Road SLEX, Taguig City	PROJECT TITLE: PROPOSED TESDA RTC-BATANGAS INNOVATION CENTER LOCATION: P. HERRERA ST. POBLACION 006, BATANGAS CITY	ELECTRICAL ENGINEER: ENGR. JOHN ADRIAN C. SANTOS, PMU-SIPTVETS, ENGINEERING SECTION	PROJECT MANAGER: DIR. ENRICO C. BANARIO, PMU-SIPTVETS	PROJECT DIRECTOR: SEC. SUHARTO T. MANGUDADATU, Ph.D., PMU-SIPTVETS	SHEET CONTENTS: GENERAL NOTES, ABBREVIATION, LOCATION & VICINITY MAP, CCTV SINGLE LINE DIAGRAM, VOICE/DATA SINGLE LINE DIAGRAM	SHEET NO. EC-0A

LEGENDS AND SYMBOLS	
	SMOKE DETECTOR
F	MANUAL PULL STATION
SL	STROBE LIGHT
	FIREMAN'S TELEPHONE JACK
IM	INPUT MODULE
OM	OUTPUT MODULE
S	CEILING MOUNTED SPEAKER
M	PA MICROPHONE
RU/RD	RISER UP/DOWN
	FIXED TYPE, IP-BASED CCTV CAMERA
	DOME TYPE, IP-BASED CCTV CAMERA
	WALL MOUNTED, VOICE/DATA OUTLET
	FLOOR MOUNTED. VOICE/DATA OUTLET
	WIRELESS ACCESS POINT

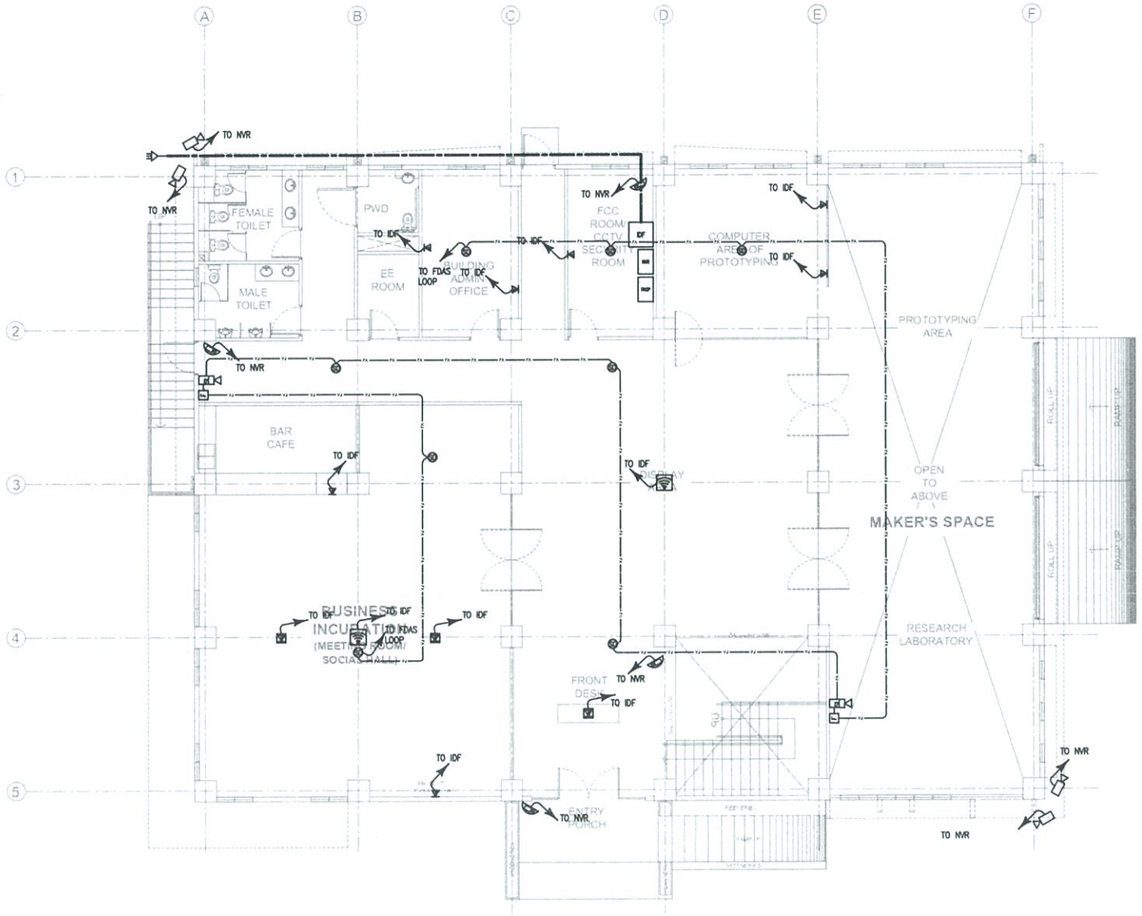

TESDA INNOVATION CENTER - RTC-BATANGAS

GROUND FLOOR AUXILIARY LAYOUT

SCALE: 1: 200 mm

FOR APPROVAL PLANS OF REGIONAL TVET INNOVATION CENTERS (RTICs) 2023	PROJECT OWNER: TECHNICAL EDUCATION AND SKILLS DEVELOPMENT AUTHORITY MAIN OFFICE ADDRESS: TESDA COMPLEX, East Service Road SLEX Taguig City	PROJECT TITLE: PROPOSED TESDA RTC-BATANGAS INNOVATION CENTER LOCATION: P. HERRERA ST. POBLACION 006 BATANGAS CITY	ELECTRICAL ENGINEER: ENGR. JOHN ADRIAN Z. SANTOS, PMU-SIPTVETS, ENGINEERING SECTION	PROJECT MANAGER: DIR. ENRICO C. BANARIO, PMU-SIPTVETS	PROJECT DIRECTOR: SEC. SUHARTO T. MANGUDADATU, Ph.D., PMU-SIPTVETS	SHEET CONTENTS: GROUND FLOOR AUXILIARY LAYOUT	SHEET NO. EC-1

LEGENDS AND SYMBOLS	
SD	SMOKE DETECTOR
F	MANUAL PULL STATION
SL	STROBE LIGHT
	FIREMAN'S TELEPHONE JACK
IM	INPUT MODULE
OM	OUTPUT MODULE
S	CEILING MOUNTED SPEAKER
M	PA MICROPHONE
RU/RD	RISER UP/DOWN
	FIXED TYPE, IP-BASED CCTV CAMERA
	DOME TYPE, IP-BASED CCTV CAMERA
	WALL MOUNTED, VOICE/DATA OUTLET
	FLOOR MOUNTED. VOICE/DATA OUTLET
	WIRELESS ACCESS POINT

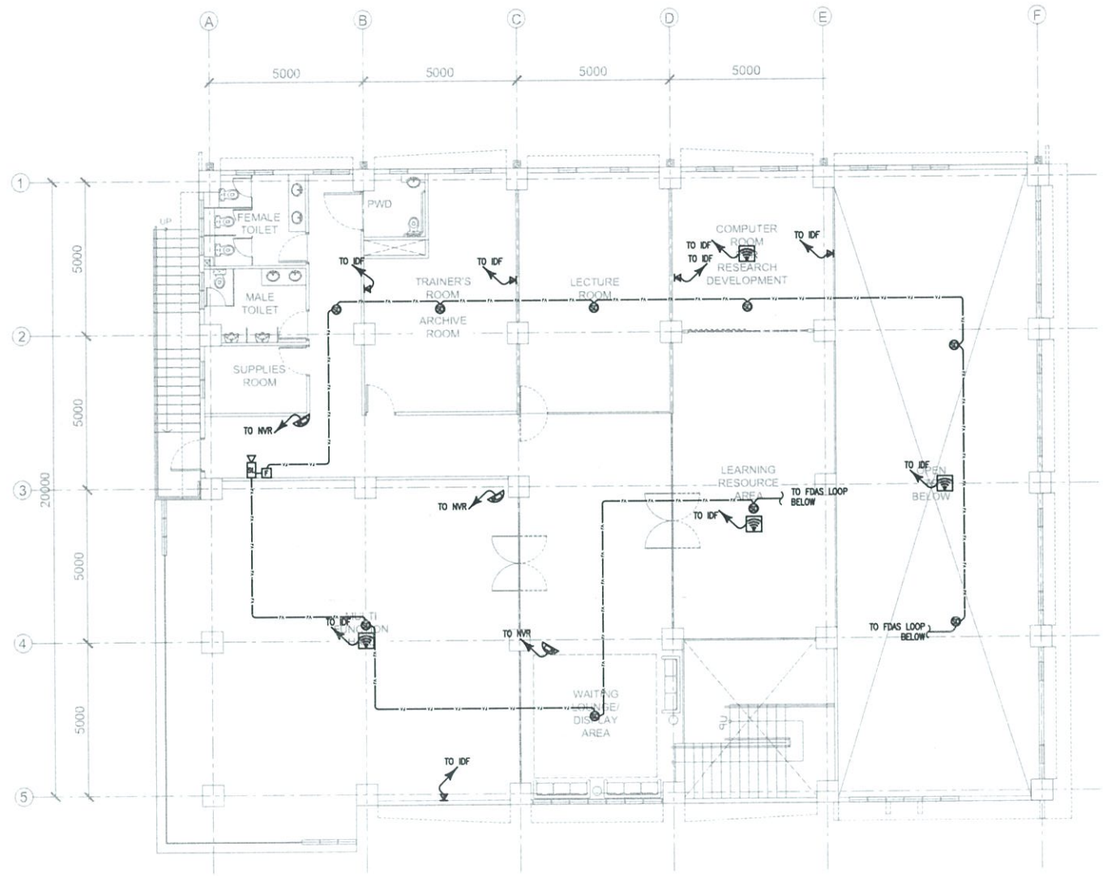

TESDA INNOVATION CENTER - RTC-BATANGAS

SECOND FLOOR AUXILIARY LAYOUT

SCALE: 1: 200 mm

FOR APPROVAL PLANS OF REGIONAL TVET INNOVATION CENTERS (RTICs) 2023	PROJECT OWNER: TECHNICAL EDUCATION AND SKILLS DEVELOPMENT AUTHORITY MAIN OFFICE ADDRESS: TESDA COMPLEX, East Service Road SLEX, Taguig City	PROJECT TITLE: PROPOSED TESDA RTC-BATANGAS INNOVATION CENTER LOCATION: P. HERRERA ST. POBLACION 006, BATANGAS CITY	ELECTRICAL ENGINEER: ENGR. JOHN ADRIAN C. SANTOS, PMU-SIPTVETS, ENGINEERING SECTION	PROJECT MANAGER: DIR. ENRICO C. BAYARIO, PMU-SIPTVETS	PROJECT DIRECTOR: SEC. SUHARTO T. MANGUDADATU, Ph.D., PMU-SIPTVETS	SHEET CONTENTS: 2ND FLOOR AUXILIARY LAYOUT	SHEET NO. EC-2

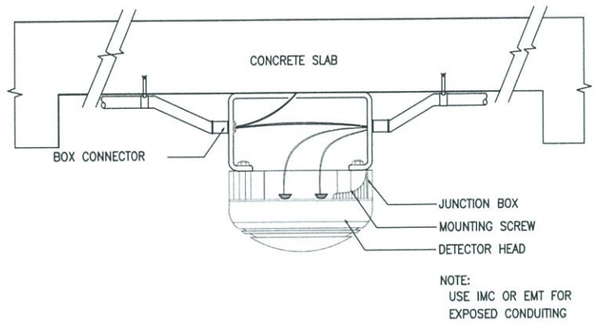

SMOKE DETECTOR MOUNTING DETAIL ON CONCRETE WITH EXPOSED CONDUITS
SCALE: NTS

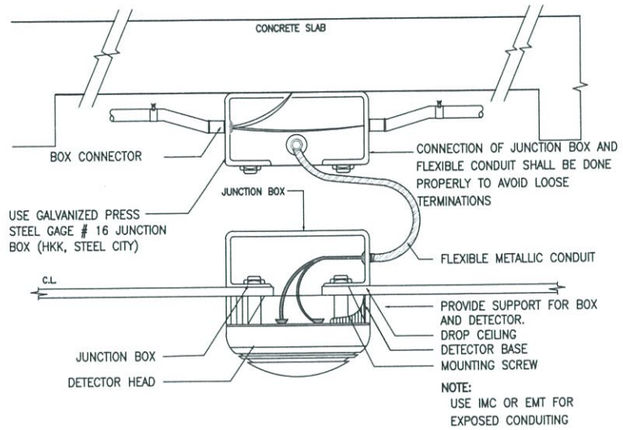

SMOKE DETECTOR MOUNTING DETAIL ON DROP CEILING WITH EXPOSED CONDUITS
SCALE: NTS

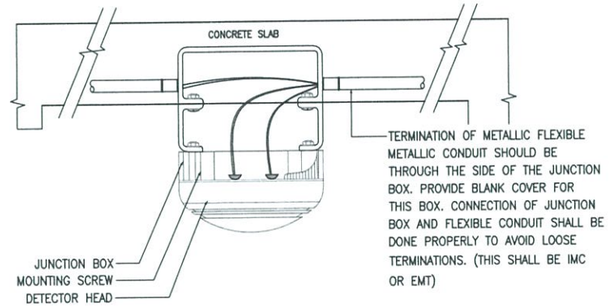

SMOKE DETECTOR MOUNTING DETAIL ON CONCRETE WITH EMBEDDED CONDUITS
SCALE: NTS

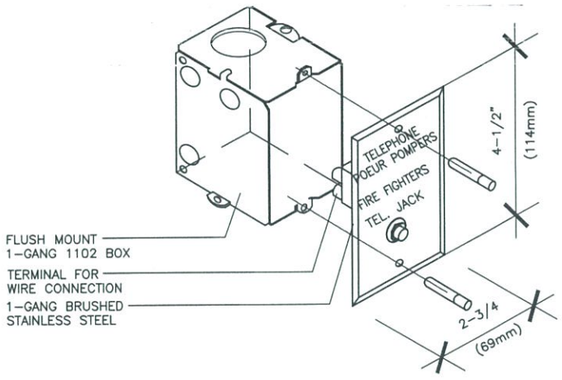

FIREMAN'S TELEPHONE JACK MOUNTING DETAIL
SCALE: NTS

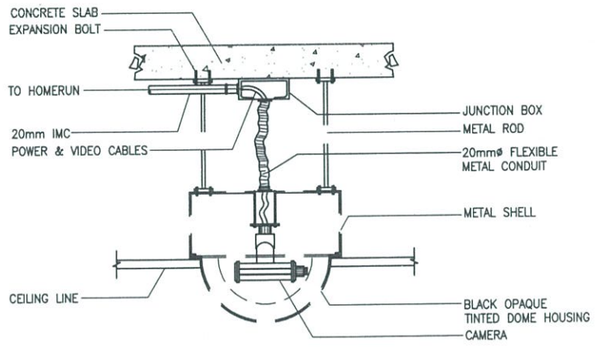

TYPICAL CAMERA MOUNTING DETAIL
SCALE: NTS

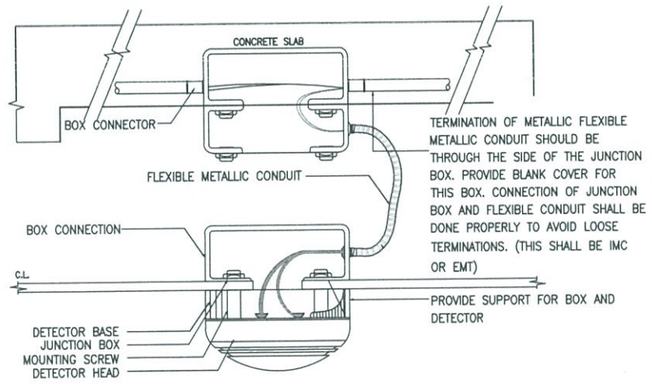

SMOKE DETECTOR MOUNTING DETAIL ON DROP CEILING WITH EMBEDDED CONDUITS
SCALE: NTS

FOR APPROVAL PLANS OF REGIONAL TVET INNOVATION CENTERS (RTICs) 2023

PROJECT OWNER:	PROJECT TITLE:	ELECTRICAL ENGINEER:	PROJECT MANAGER:	PROJECT DIRECTOR:	SHEET CONTENTS:	SHEET NO.
TECHNICAL EDUCATION AND SKILLS DEVELOPMENT AUTHORITY MAIN OFFICE ADDRESS: TESDA COMPLEX, East Service Road SLEX, Taguig City	PROPOSED TESDA RTC-BATANGAS INNOVATION CENTER LOCATION: P. HERRERA ST. POBLACION 306, BATANGAS CITY	ENGR. JOHN ADRIAN C. SANTOS PMU-SIPTVETS ENGINEERING SECTION	DIR. ENRICO C. BANARIO PMU-SIPTVETS	SEC. SUHARTO T. MANGUDADATU, Ph.D. PMU-SIPTVETS	MISCELLANEOUS DETAILS	EC-3

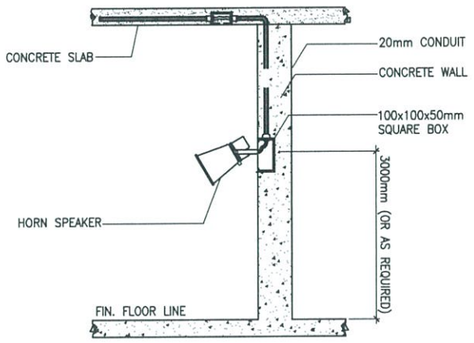

WALL MOUNTED HORN SPEAKER MOUNTING DETAIL
SCALE: NTS

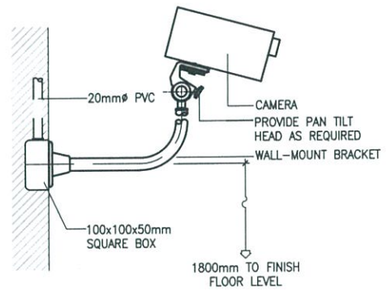

WALL MOUNTED CCTV MOUNTING DETAIL
SCALE: NTS

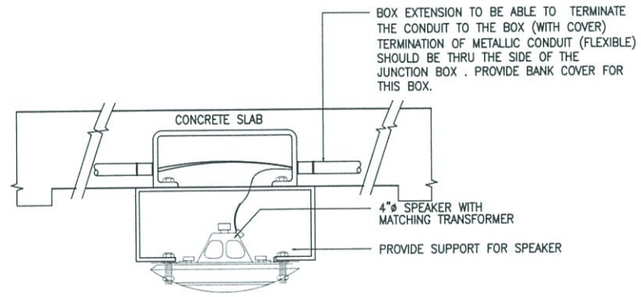

SPEAKER MOUNTING DETAIL ON CONCRETE WITH EMBEDDED CONDUITS
SCALE: NTS

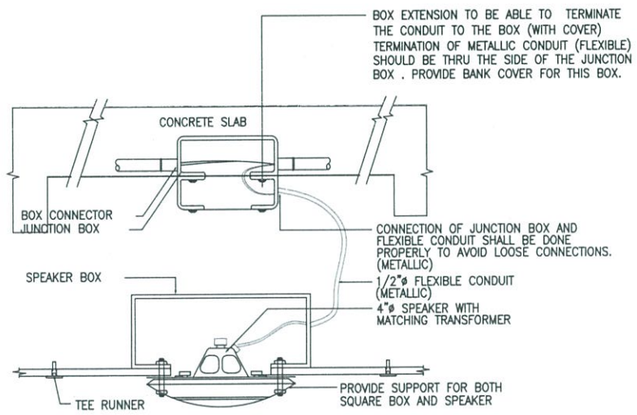

SPEAKER MOUNTING DETAIL ON DROP CEILING WITH EMBEDDED CONDUITS
SCALE: NTS

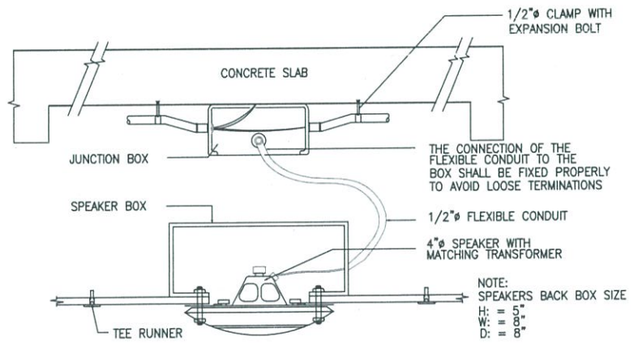

SPEAKER MOUNTING DETAIL ON DROP CEILING WITH EXPOSED CONDUITS
SCALE: NTS

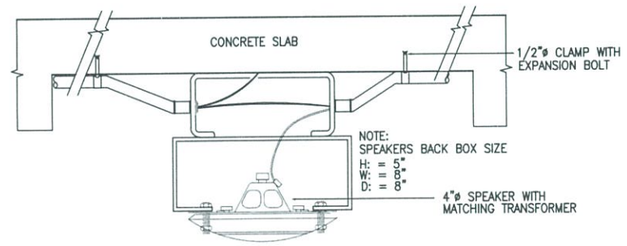

SPEAKER MOUNTING DETAIL ON CONCRETE WITH EXPOSED CONDUITS
SCALE: NTS

FOR APPROVAL PLANS OF REGIONAL TVET INNOVATION CENTERS (RTICs) 2023

PROJECT OWNER:	PROJECT TITLE:	ELECTRICAL ENGINEER:	PROJECT MANAGER:	PROJECT DIRECTOR:	SHEET CONTENTS:	SHEET NO.
TECHNICAL EDUCATION AND SKILLS DEVELOPMENT AUTHORITY MAIN OFFICE ADDRESS: TESDA COMPLEX, East Service Road SLEX, Taguig City.	PROPOSED TESDA RTC-BATANGAS INNOVATION CENTER LOCATION: P. HERRERA ST. POBLACION 006, BATANGAS CITY	ENGR. JOHN ADRIAN C. SANTOS PMU-SIPTVETS ENGINEERING SECTION	DIR. ENRICO C. BANARIO PMU-SIPTVETS	SEC. SUHARTO T. MANGUDADATU, Ph.D. PMU-SIPTVETS	MISCELLANEOUS DETAILS	EC-4

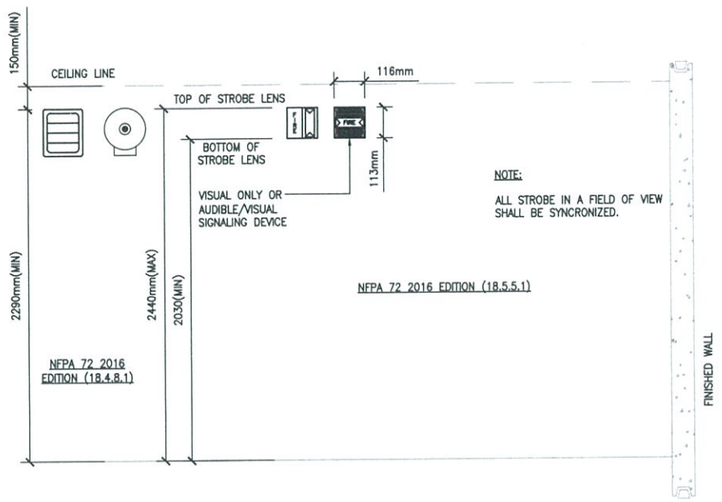

NFPA 72 2016 EDITION (18.4): AUDIBLE CHARACTERISTICS

NFPA 72 2016 EDITION (18.4.8): LOCATION OF AUDIBLE NOTIFICATION APPLIANCES FOR BUILDING OR STRUCTURES.

NFPA 72 2016 EDITION (18.4.8.1): IF CEILING HEIGHTS ALLOW, AND UNLESS OTHERWISE PERMITTED BY 18.4.8.2 THROUGH 18.4.8.5, WALL-MOUNTED APPLIANCES SHALL HAVE THEIR TOPS ABOVE THE FINISHED FLOORS AT HEIGHTS OF NOT LESS THAN 2290mm(90in.) AND BELOW THE FINISHED CEILING AT DISTANCES OF NOT LESS THAN 150mm(6in.)

NFPA 72 2016 EDITION (18.4.8.3): IF COMBINATION AUDIBLE/VISIBLE APPLIANCES ARE INSTALLED, THE LOCATION OF THE APPLIANCE SHALL BE DETERMINED BY THE REQUIREMENTS OF 18.5.5

NFPA 72 2016 EDITION (18.5): VISIBLE CHARACTERISTICS PUBLIC MODE.

NFPA 72 2016 EDITION (18.5.5): APPLIANCES LOCATION.

NFPA 72 2016 EDITION (18.5.5.1): WALL MOUNTED APPLIANCES SHALL BE MOUNTED SUCH THAT THE ENTIRE LENS IS NOT LESS THAN 2030mm (80in) AND NOT GREATER THAN 2440mm (96in). ABOVE THE FINISHED FLOOR OR AT THE MOUNTING HEIGHT SPECIFIED USING THE PERFORMANCE BASED ALTERNATIVE. AT NFPA 2016 EDITION (A7.5.4.5).

NFPA 72 2016 EDITION (18.5.5.5.5): VISIBLE NOTIFICATION APPLIANCES SHALL BE LOCATED NOT MORE THAN 4570mm(15ft.) FROM THE END OF THE CORRIDOR WITH A SEPARATION NOT GREATER THAN 30500mm(100ft) BETWEEN APPLIANCES.

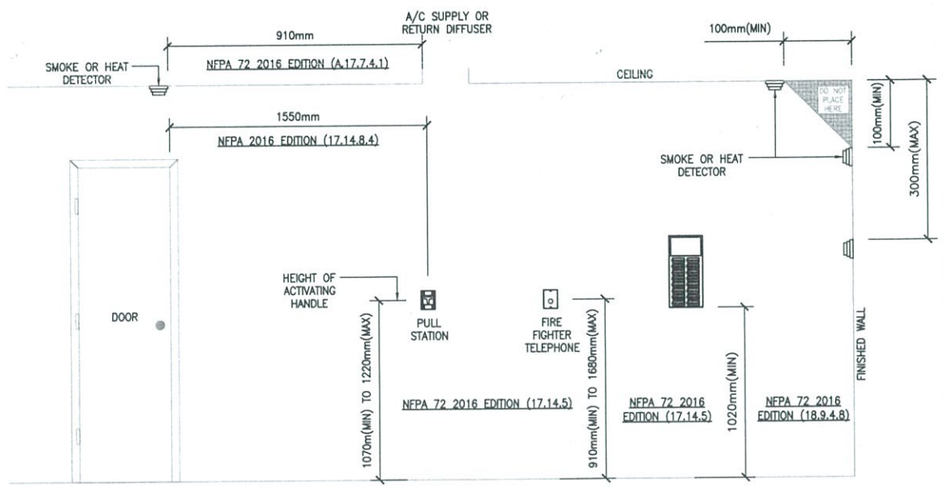

NFPA 72 2016 EDITION
17.6.3.1.3.1 HEAT – UNLESS OTHERWISE MODIFIED BY 17.6.3.2.2 OR 17.6.3.3.2 OR 17.6.3.7 SPOT-TYPE HEAT-SENSING FIRE DETECTORS SHALL BE LOCATED ON THE CEILING NOT LESS THAN 100mm (4in) FROM THE SIDEWALL OR ON THE SIDEWALLS BETWEEN 100mm AND 300mm (4in. AND 12 in.) FROM THE CEILING.

NFPA 72 2016 EDITION (A.17.7.4.1): DETECTORS SHOULD NOT BE LOCATED IN A DIRECT AIRFLOW OR CLOSER THAN 910mm(36in.) FROM AN AIR SUPPLY DIFFUSER OR RETURN AIR OPENING. SUPPLY OR RETURN SOURCES LARGER THAN THOSE COMMONLY FOUND IN RESIDENTIAL AND SMALL COMMERCIAL ESTABLISHMENT CAN BE REQUIRE GREATER CLEARANCE TO SMOKE DETECTORS.

NFPA 72 2016 EDITION (17.14.8.4): MANUAL FIRE ALARM BOXES SHALL BE LOCATED WITHIN 1.5m (5ft.) OF EACH EXIT DOORWAY ON EACH FLOOR.

NFPA 72 2016 EDITION (17.14.5): THE OPERABLE PART OF A MANUALLY ACTIVATED ALARM INITIATING DEVICE SHALL BE NOT LESS THAN 42in. (1070mm) AND NOT MORE THAN 48in. (1220mm) FROM THE FINISHED FLOOR.

NFPA 72 2016 EDITION (17.7.3.2.1): SPOT-TYPE SMOKE DETECTORS SHALL BE LOCATED ON THE CEILING OR, IF ON A SIDEWALL, BETWEEN THE CEILING AND 12in. (300mm) DOWN FROM THE CEILING TO THE TOP OF DETECTOR.

NFPA 72 2016 EDITION (24.8.17): WALL MOUNTED TELEPHONE APPLIANCES OR RELATED JACKS SHALL BE NOT LESS THAN 910mm(36in.) AND NOT MORE THAN 1680mm(66in.) ABOVE FLOOR LEVEL WITH CLEAR ACCESS TO THE APPLIANCE THAT IS AT LEAST 760mm(30in.) WIDE.

NFPA 72 2016 EDITION (18.9.4.8*): ALL CHARACTERS AND GRAPHICAL VISIBLE NOTIFICATION APPLIANCES SHALL BE A MINIMUM OF 1020mm(40in.) ABOVE THE GROUND OR FINISHED FLOOR.

NFPA 72 2016 EDITION (18.11): STANDARD EMERGENCY SERVICE INTERFACE. WHERE REQUIRED BY THE ENFORCING AUTHORITY; GOVERNING LAWS, CODES, OR STANDARDS; OR OTHER PARTS OF THIS CODE, ANNUNCIATORS, INFORMATION DISPLAY SYSTEMS, AND CONTROL FOR PORTIONS OF A SYSTEM PROVIDED FOR USE BY EMERGENCY SERVICE PERSONNEL SHALL BE DESIGNED, ARRANGED, AND LOCATED IN ACCORDANCE WITH THE REQUIREMENTS OF THE ORGANIZATIONS INTENDED TO USE THE EQUIPMENT.

FIRE ALARM SYSTEM DEVICE MOUNTING HEIGHTS AND LIMITATIONS

SCALE: NTS

FOR APPROVAL PLANS OF REGIONAL TVET INNOVATION CENTERS (RTICs) 2023	PROJECT OWNER: TECHNICAL EDUCATION AND SKILLS DEVELOPMENT AUTHORITY MAIN OFFICE ADDRESS: TESDA COMPLEX, East Service Road SLEX, Taguig City	PROJECT TITLE: PROPOSED TESDA RTC-BATANGAS INNOVATION CENTER LOCATION: P. HERRERA ST. POBLACION 006, BATANGAS CITY	ELECTRICAL ENGINEER: ENGR. JOHN ADRIAN C. SANTOS PMU-SIPTVETS ENGINEERING SECTION	PROJECT MANAGER: DIR. ENRICO C. BANARIO PMU-SIPTVETS	PROJECT DIRECTOR: SEC. SUHARTO T. MANGUDADATU, Ph.D. PMU-SIPTVETS	SHEET CONTENTS: FIRE ALARM SYSTEM DEVICE MOUNTING HEIGHTS AND LIMITATIONS SHEET NO. EC-5

GENERAL PLUMBING NOTES:

1. GENERAL NOTES ARE APPLICABLE TO ALL PLUMBING WORKING DRAWINGS
2. THE WORK SHALL BE EXECUTED IN STRICT CONFORMITY WITH BASE BUILDING SPECIFICATION AND WITH THE LATEST EDITION OF CONFLICT BETWEEN THE CONTRACT DOCUMENTS AND COVERING CODE OR ORDINANCE THE MORE STRINGENT STANDARD SHALL APPLY.
3. ALL PLUMBING WORK SHALL BE COORDINATED WITH ALL OTHER TRADES BEFORE PROCEEDING WITH INSTALLATION.
4. NO CHARGES ARE TO BE MADE IN PLUMBING LAYOUT WITHOUT WRITTEN PERMISSION BY THE ENGINEER OR RECORDS/MASTER PLUMBER.
5. NO PIPING SHALL RUN EXPOSED IN SALES OR FINISHED AREA.
6. PLUMBING CONTRACTOR SHALL BE RESPONSIBLE FOR OBTAINING ALL NECESSARY PERMITS AND FOR PAYING RELATED FEES.
7. ROUGH-IN DIMENSIONS OF TOILET FIXTURES MUST BE COORDINATED WITH GENERAL CONTRACTOR AND FIELD SUPERVISOR.
8. INSTALL GATE VALVES/ BALL VALVES ON ALL BRANCH SUPPLY LINES.
9. PROVIDE ACCESS PANELS ON ALL INACCESSIBLE VALVES AND CLEANOUTS. ACCESS PANELS SHALL BE PROVIDED BY GENERAL CONTRACTOR. PLUMBING CONTRACTOR SHALL BE RESPONSIBLE FOR THEIR LOCATION.
10. ALL WORK SHALL BE PROPERLY TESTED, BALANCED AND CLEANED. PROVIDE ONE YEAR WARRANTY FROM DATE OF FINAL INSPECTION ON ALL PARTS AND LABOR.
11. ALL FIXTURES TO BE SUPPLIED & INSTALLED BY PLUMBING CONTRACTOR.
12. GENERAL CONTRACTOR SHALL COORDINATE WATER METER LOCATION AND INSTALLATION WITH LOCAL AUTHORITIES AND CIVIL DRAWINGS.
13. TRAP SEAL PRIMERS ARE TO BE PROVIDED AT NO ADDITIONAL COST TO OWNER/ CLIENT , IF REQUIRED BY LOCAL BUILDING CODE OFFICIALS.
14. ALL VENT PIPE SHALL BE EXHAUST OVER THE CEILING OF ROOF OVERHANG. NO VENT SHALL EXTENDED THRU ROOF.
15. APPLY A BEAD OF SEALANT AROUND ALL FIXTURES WHERE THEY MEET FLOORS, WALLS, ETC. PROVIDE PIPE SLEEVES AT ANY WALL/ FLOOR PENETRATION.
16. THESE DRAWINGS ARE SCHEMATIC IN NATURE AND REPRESENT ONLY THE GENERAL AND APPROXIMATE LOCATIONS OF FIXTURES, PIPING, ETC. REFER TO THE ARCHITECTURAL PLANS AND ACTUAL CONDITIONS FOR LOCATING FIXTURES, ETC.
17. THAT ALL WATER SUPPLIES TO FIXTURES ARE ANCHORED TO PREVENT ANY LATERAL MOVEMENT.
18. SUPPORT ALL PIPING EQUIPMENT , ETC. AS PER CODE REQUIREMENTS.
19. REFER TO ARCHITECTURAL PLANS FOR MOUNTING HEIGHTS OF PLUMBING.
20. FURNISH AS REQUIRED FOR ALL FIXTURES, INCLUDING ONES FURNISHED BY OTHERS, P-TRAPS, ANGLE STOPS, RISERS, ESCUTCHEONS, ETC.
21. EACH CONTRACTOR SHALL BE RESPONSIBLE FOR VISITING THE SITE PRIOR TO BIDDING IN ORDER TO BECOME FAMILIAR WITH EXISTING CONDITIONS AND DISCREPANCIES OR QUESTIONS SHALL BE BROUGHT TO THE ATTENTION OF THE ARCHITECT PRIOR TO BIDDING.
22. CONTRACTOR SHALL BE RESPONSIBLE FOR DETERMINING RIGHT OR LEFT HAND OR FIXTURES.
23. ALL PENETRATIONS OF CONCRETE FOUNDATIONS & FOOTINGS SHALL BE MINIMUM OF 50MM DIAMETER.
24. ALL SANITARY SEWER PIPING UNDER CONCRETE SLAB SHALL BE MINIMUM OF 50MM DIAMETER.
25. REFER TO ARCHITECTURAL SPECIFICATIONS FOR SOIL COMPACTING, CONCRETE AND ASPHALT REPAIR.
26. SUBMIT SHOP DRAWINGS ON ALL PLUMBING FIXTURES, SEE ARCHITECTURAL FOR QUANTITY.
27. USE POLYPROPYLENE FOR ALL WATER SUPPLY LINES.
28. USE, POLYVINYL CHLORIDE (PVC) SERIES 1000 FOR ALL DRAINAGE LINE, OBSERVE SLOPE OF 1% FOR LONG RUNNING DRAINAGE LINE AND SLOPE OF 2% FOR SHORT RUN DRAINAGE LINE, VERIFY.

GENERAL PLUMBING NOTES:

1. ALL PLUMBING WORKS INCLUDED HEREIN SHALL BE EXECUTED ACCORDING TO THE REQUIREMENTS OF THE PHILIPPINE PLUMBING CODE AND RULES AND REGULATIONS OF THE GOVERNMENT.
2. COORDINATE DRAWINGS WITH OTHER RELATED DRAWINGS AND SPECIFICATIONS.
3. THE ENGINEER SHALL BE NOTIFIED IMMEDIATELY OF ANY DISCREPANCY FOUND THEREIN.
4. PIPES SHALL BE INSTALLED AS INDICATED, ANY RELOCATION REQUIRED FOR PROPER EXECUTION OF OTHER TRADES SHALL BE PIPE STRUCTURE.
5. ALL HORIZONTAL BRANCHES SHALL MAINTAIN 1% AS MINIMUM UNLESS NOTED OTHERWISE.
6. ALL FIXTURES SHALL VENTED, UNLESS INDICATED.
7. ALL INDIVIDUAL BRANCHES TO FIXTURES OR GROUP OF FIXTURES OR EQUIPMENT SHALL BE PROVIDED WITH AIR CHAMBER.

MATERIAL SPECIFICATIONS:

COLD WATER LINE (INTERIOR) - SHALL BE POLYPROPYLENE RANDOM (TYPE 3). HIGH RESISTANCE TO PRESSURE AND TEMPERATURE, CONFORMING TO EN ISO 15874, SIMILAR TO GEORGE FISCHER PP-R PIPE, UNITEC PP-R PIPE OR APPROVED EQUAL.

COLD WATER LINE (EXPOSED) - SHALL BE GALVANIZED STEEL PIPE, SCHEDULE 40, CONFORMING TO ASTM A 53 A 120. SIMILAR TO APO PIPE SCHEDULE 40 OR APPROVED EQUAL.

SOIL, WASTE AND VENT LINES- SHALL BE UNPLASTICIZED POLYVINYL CHLORIDE (UPVC) PIPE CONFIRMING TO ASTM D2729, SIMILAR TO NELTEX SERIES 100 UPVC PIPE OR APPROVED EQUAL.

DOWNSPOUTS- SHALL BE UNPLASTICIZED POLYVINYL, CHLORIDE (UPVC) PIPE CONFORMING TO ASTM D2729. SIMILAR TO NELTEX/ EMERALD/ MOLDEX SERIES 100 UPVC PIPE OR APPROVED EQUAL.

DRAINAGE LINE- SHALL BE UNPLASTICIZED POLYVINYL CHLORIDE (UPVC) PIPE CONFORMING TO ASTM D2729, SIMILAR TO NELTEX/EMERALD/ MOLDEX SERIES 1000 UPVC PIPE OR APPROVED EQUAL.

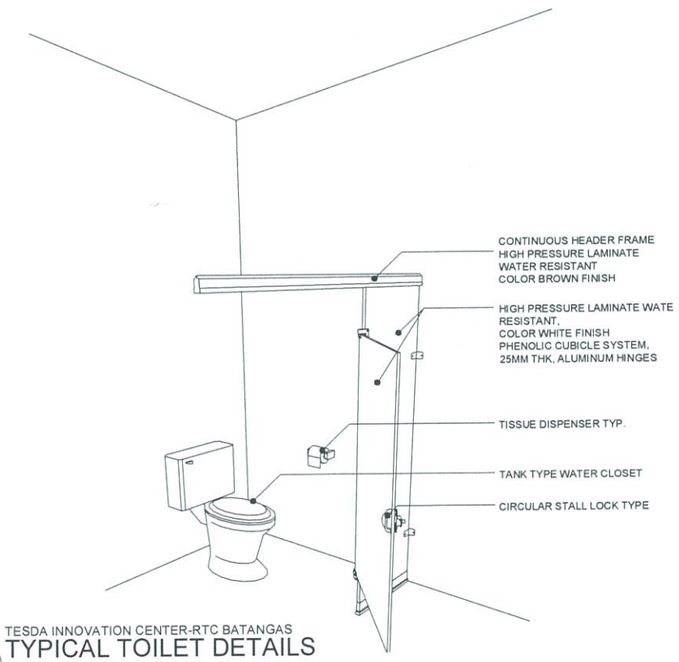

TESDA INNOVATION CENTER-RTC BATANGAS
TYPICAL TOILET DETAILS
SCALE: 1:200mm

LEGEND		ABBREVIATION	
- - - - - - - - - - - - - -	SANITARY LINE	LAV	LAVATORY
- - - - - - - - - - - - - -	WATER LINE	KS	KITCHEN SINK
- - - - - - - - - - - - - -	DRAINAGE LINE	VAC	VENT ABOVE CEILING
- - - - - - - - - - - - - -	VENT PIPE	VP	VENT PIPE
- - - -⊳⊲- - - -	GATE VALVE	VTR/VTC	VENT THRU ROOF/VENT THRU CEILING
- - - -⊲⊳- - - -	CHECK VALVE	SS	SOIL STACK/ WASTE PIPE
- - - -Ⓜ- - - -	WATER METER	AAV	AIR ADMITTANCE VALVE
CO⊢- - - - - - - -	FLOOR CLEANOUT	PVC	POLYVINYL CHLORIDE
ø	DIAMETER	CWL	COLD WATER LINE
ABBREVIATION		FD	FLOOR DRAIN
		SH	SHOWER HEAD
AC	AIR CHAMBER	DD	DECK DRAIN
WC	WATER CLOSET	BD	BALCONY DRAIN
URI	URINAL	mm	MILLIMETER

PLUMBING FIXTURES CONNECTION SIZE SCHEDULE

LEGEND	SYMBOL	MIN. PIPE CONNECTION SIZE MM DIAMETER				REMARKS
		WASTE/ SOIL	VENT	STORM	COLD WATER	
WC	WATER CLOSET	100	50	-	20	TANK TYPE
LAV	LAVATORY	50	50	-	20	-
KS	KITCHEN SINK	50	50	-	20	-
SHO/ SD	SHOWER/ SHOWER DRAIN	50	50	-	20	-
FD	FLOOR DRAIN	50	50	-	-	WITH P-TRAP
HB	HOSE BIBB	-	-	-	20	-

SPECIFICATION

ITEMS	MATERIAL	THICKNESS
WASTE/ SEWAGE LINE	POLYVINYL CHLORIDE (PVC)	SERIES 1000
VENT PIPES	POLYVINYL CHLORIDE (PVC)	SERIES 1000
STORM DRAINAGE LINE (DS)	POLYVINYL CHLORIDE (PVC)	SERIES 1000
RAINWATER COLLECTOR	POLYVINYL CHLORIDE (PVC)	SERIES 1000
WATERLINE (HOT/COLD)	PPR-C	PN 10

FOR APPROVAL PLANS OF REGIONAL TVET INNOVATION CENTERS (RTICs) 2023

PROJECT OWNER	PROJECT TITLE	PREPARED & CADD BY	MASTER PLUMBER	PROJECT MANAGER	PROJECT DIRECTOR	SHEET CONTENTS	SHEET NO.
TECHNICAL EDUCATION AND SKILLS DEVELOPMENT AUTHORITY MAIN OFFICE ADDRESS: TESDA COMPLEX, East Service Road SLEX, Taguig City	PROPOSED TESDA RTC BATANGAS INNOVATION CENTER LOCATION: P.HERERA, ST. , POBLACION 0006 BATANGAS CITY	AR. RUMEL A. MENDOZA HEAD, PMU-SIPTVETS ENGINEERING SECTION	ENGR. FRANCISCO B. NARAG ASSISTANT PROFFESSOR IV TESDA ISAT	DIR. ENRICO C. BANADIO PMU-SIPTVETS	SEC. SUHARTO T. MANGUDADATU, Ph.D. PMU-SIPTVETS SECRETARY, TESDA	AS SHOWN	P- 1

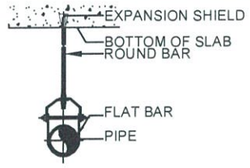

PIPE SIZE (MM)	FLAT BAR		ROUND BAR (MM)
	LOWER (MM)	UPPER (MM)	
65	4.8 x 32	4.8 x 32	12.7
80	4.8 x 32	4.8 x 32	12.7
100	4.8 x 32	6.4 X 32	15.9
150	4.8 x 32	6.4 X 32	19
200	4.8 x 32	6.4 X 32	25.4

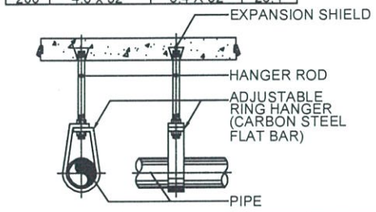

PIPE SIZE (MM)	ROD SIZE (MM)	SIZE OF STEEL FLAT BAR(MM)	PIPE SIZE (MM)	ROD SIZE (MM)	SIZE OF STEEL FLAT BAR(MM)
15	10	3.2x25	65	12	5x32
20	10	3.2x25	80	12	5x32
25	10	3.2x25	100	16	5x32
32	10	3.2x25	125	16	5x32
40	10	3.2x25	150	20	5x40
50	10	3.2x25	200	22	5x50

TESDA INNOVATION CENTER-RTC BATANGAS
DETAIL OF HANGERS
SCALE: 1:20mm

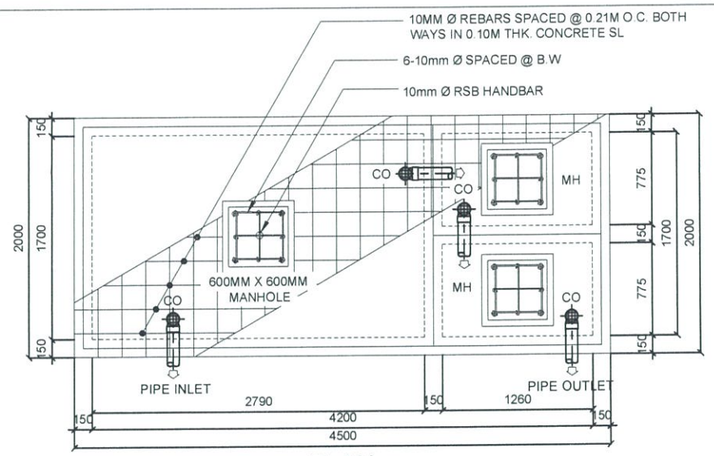

PLAN

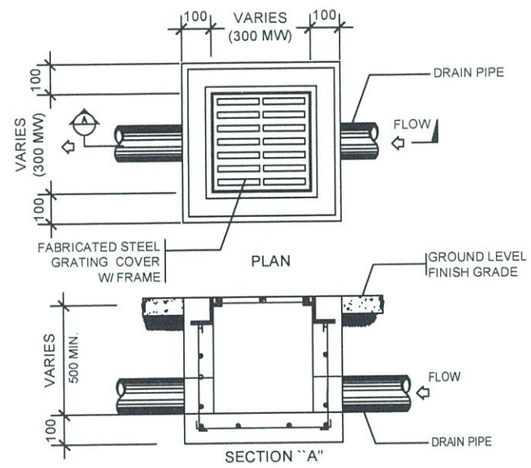

TESDA INNOVATION CENTER-RTC BATANGAS
CATCH BASIN DETAILS
SCALE: 1:30mm

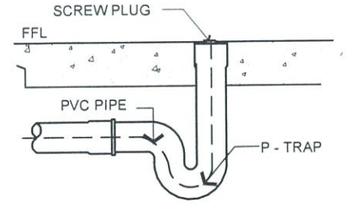

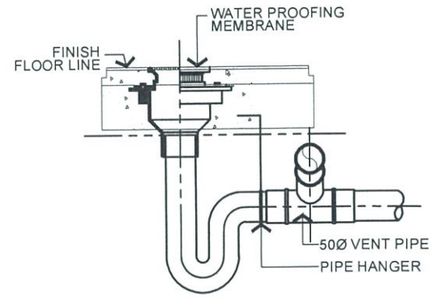

TESDA INNOVATION CENTER-RTC BATANGAS
DETAIL OF CLEAN OUT AND DRAIN
SCALE: 1:30mm

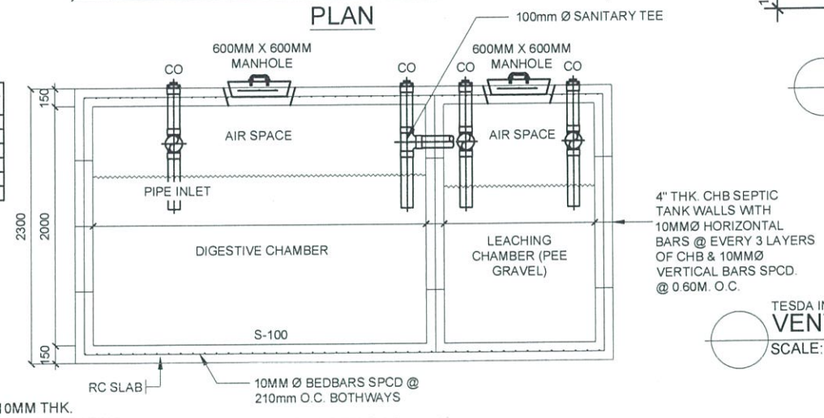

SECTION

TESDA INNOVATION CENTER-RTC BATANGAS
VENT THRU ROOF DETAIL
SCALE: 1:30mm

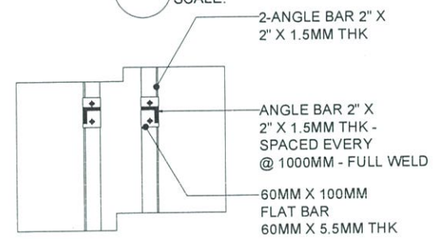

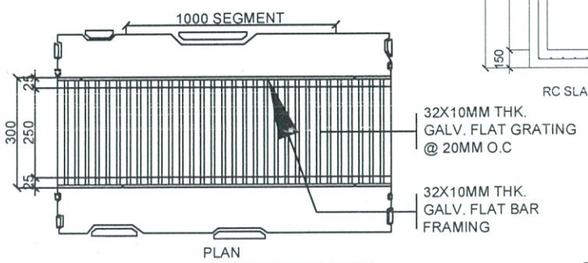

TESDA INNOVATION CENTER-RTC BATANGAS
SEPTIC TANK DETAILS
SCALE: 1:60mm

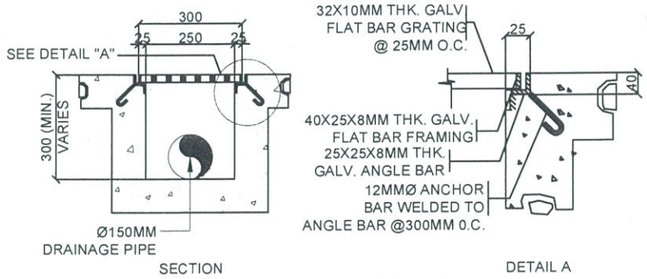

TESDA INNOVATION CENTER-RTC BATANGAS
CANAL DETAIL
SCALE: 1:20mm

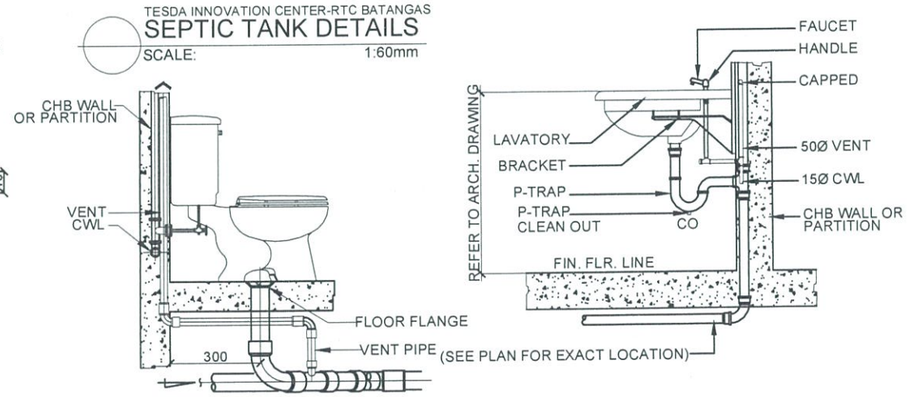

TESDA INNOVATION CENTER-RTC BATANGAS
CONNECTION DETAIL OF FIXTURES
SCALE: 1:20mm

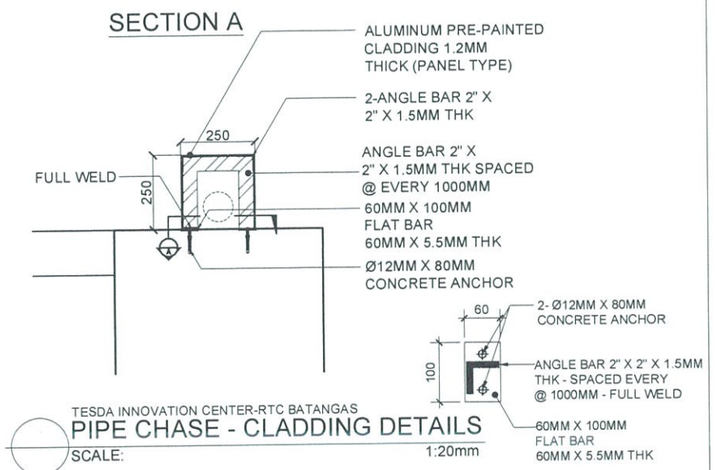

TESDA INNOVATION CENTER-RTC BATANGAS
PIPE CHASE - CLADDING DETAILS
SCALE: 1:20mm

FOR APPROVAL PLANS OF REGIONAL TVET INNOVATION CENTERS (RTICs) 2023

PROJECT OWNER:	PROJECT TITLE:	PREPARED & CADD BY:	MASTER PLUMBER:	PROJECT MANAGER:	PROJECT DIRECTOR:	SHEET CONTENTS:	SHEET NO.
TECHNICAL EDUCATION AND SKILLS DEVELOPMENT AUTHORITY MAIN OFFICE ADDRESS: TESDA COMPLEX, East Service Road SLEX, Taguig City	PROPOSED TESDA RTC BATANGAS INNOVATION CENTER LOCATION: P. HERERA, ST., POBLACION 0006 BATANGAS CITY	AR. RUNIEL A. MENDOZA HEAD, PMU-SIPTVETS ENGINEERING SECTION	ENGR. FRANCISCO B. NARAG ASSISTANT PROFFESSOR IV TESDA ISAT	DIR. ENRICO C. BANARIO PMU-SIPTVETS	SEC. SUHARTO T. MANGUDADATU, Ph.D. PMU-SIPTVETS SECRETARY, TESDA	AS SHOWN	P- 2

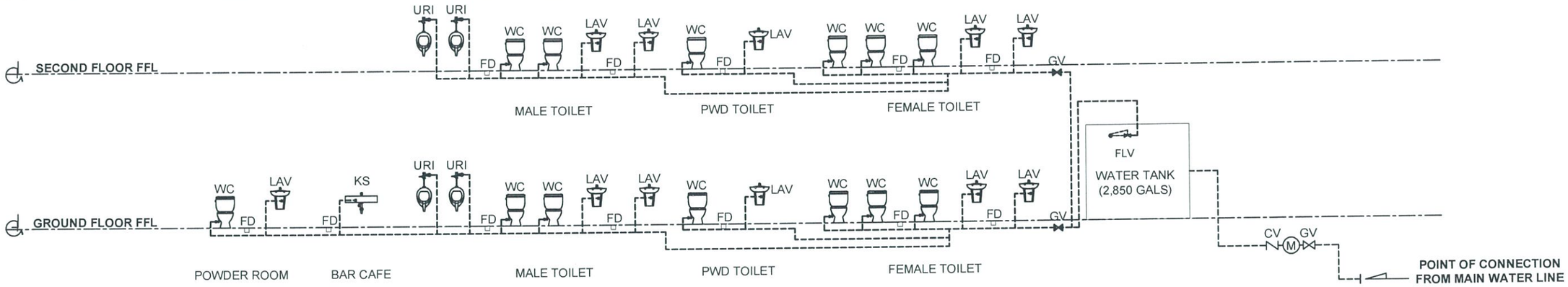

TESDA INNOVATION CENTER-RTC BATANGAS
WATERLINE RISER DIAGRAM
SCALE: 1:100mm

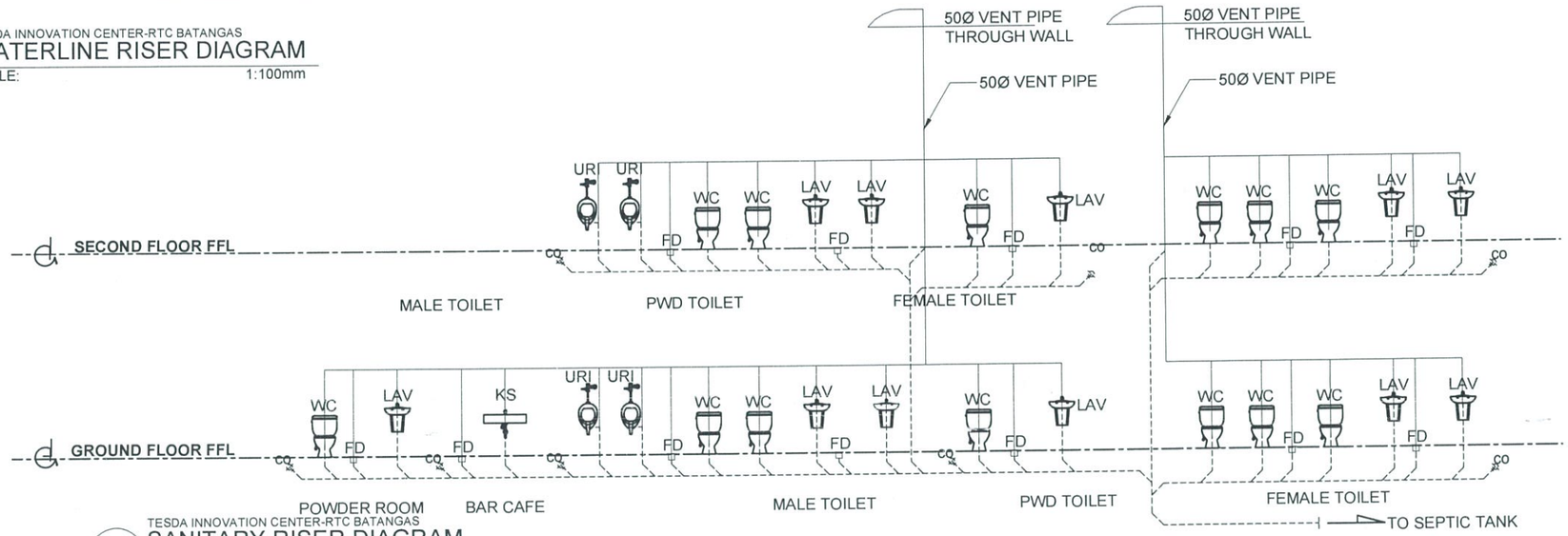

TESDA INNOVATION CENTER-RTC BATANGAS
SANITARY RISER DIAGRAM
SCALE: 1:100mm

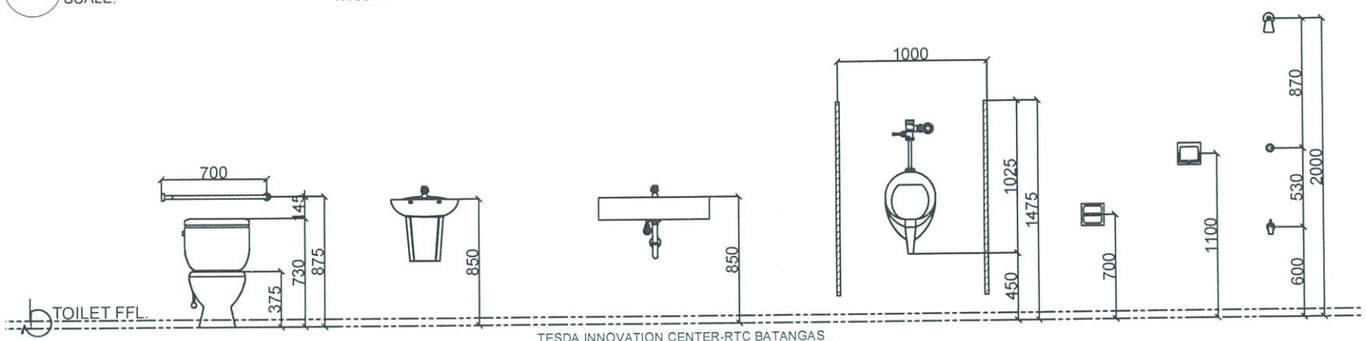

TESDA INNOVATION CENTER-RTC BATANGAS
PLUMBING FIXTURES HEIGHT
SCALE: 1:40mm

FOR APPROVAL PLANS OF REGIONAL TVET INNOVATION CENTERS (RTICs) 2023

PROJECT OWNER:	PROJECT TITLE:	PREPARED & CADD BY:	MASTER PLUMBER:	PROJECT MANAGER:	PROJECT DIRECTOR:	SHEET CONTENTS:	SHEET NO.
TECHNICAL EDUCATION AND SKILLS DEVELOPMENT AUTHORITY MAIN OFFICE ADDRESS: TESDA COMPLEX, East Service Road SLEX, Taguig City	PROPOSED TESDA RTC BATANGAS INNOVATION CENTER LOCATION: P.HERERA. ST. POBLACION 0006 BATANGAS CITY	AR. RUNIEL A. MENDOZA HEAD, PMU-SIPTVETS ENGINEERING SECTION	ENGR. FRANCISCO B. NARAG ASSISTANT PROFFESSOR IV TESDA ISAT	DIR. ENRICO C. BANARIO PMU-SIPTVETS	SEC. SUHARTO T. MANGUDADATU, Ph.D. PMU-SIPTVETS SECRETARY, TESDA	AS SHOWN	P- 3

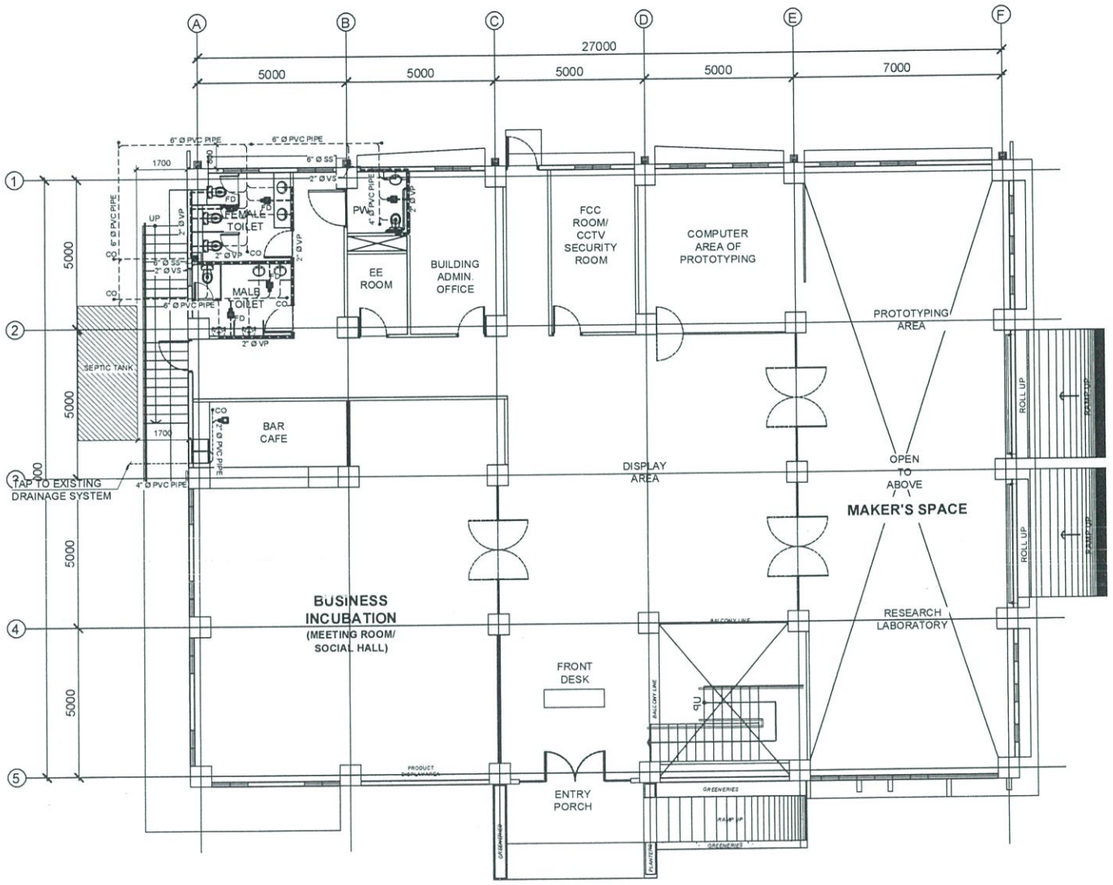

TESDA INNOVATION CENTER-RTC BATANGAS

P

GROUND FLOOR SANITARY LAYOUT

SCALE 1:200MTS

FOR APPROVAL PLANS OF REGIONAL TVET INNOVATION CENTERS (RTICs) 2023	PROJECT OWNER: TECHNICAL EDUCATION AND SKILLS DEVELOPMENT AUTHORITY MAIN OFFICE ADDRESS: TESDA COMPLEX, East Service Road SLEX, Taguig City	PROJECT TITLE: PROPOSED TESDA RTC BATANGAS INNOVATION CENTER LOCATION: P.HERERA, ST., POBLACION 0006 BATANGAS CITY	PREPARED & CADD BY: AR. RUNIEL A. MENDOZA, LEAD, PMU-SIPTVETS ENGINEERING SECTION	MASTER PLUMBER: ENGR. FRANCISCO B. NARAG, ASSISTANT PROFFESSOR IV, TESDA ISAT	PROJECT MANAGER: DIR. ENRICO C. BANARIO, PMU-SIPTVETS	PROJECT DIRECTOR: SEC. SUHARTO T. MANGUDADATU, Ph.D., PMU-SIPTVETS, SECRETARY, TESDA	SHEET CONTENTS: AS SHOWN	SHEET NO. P- 4

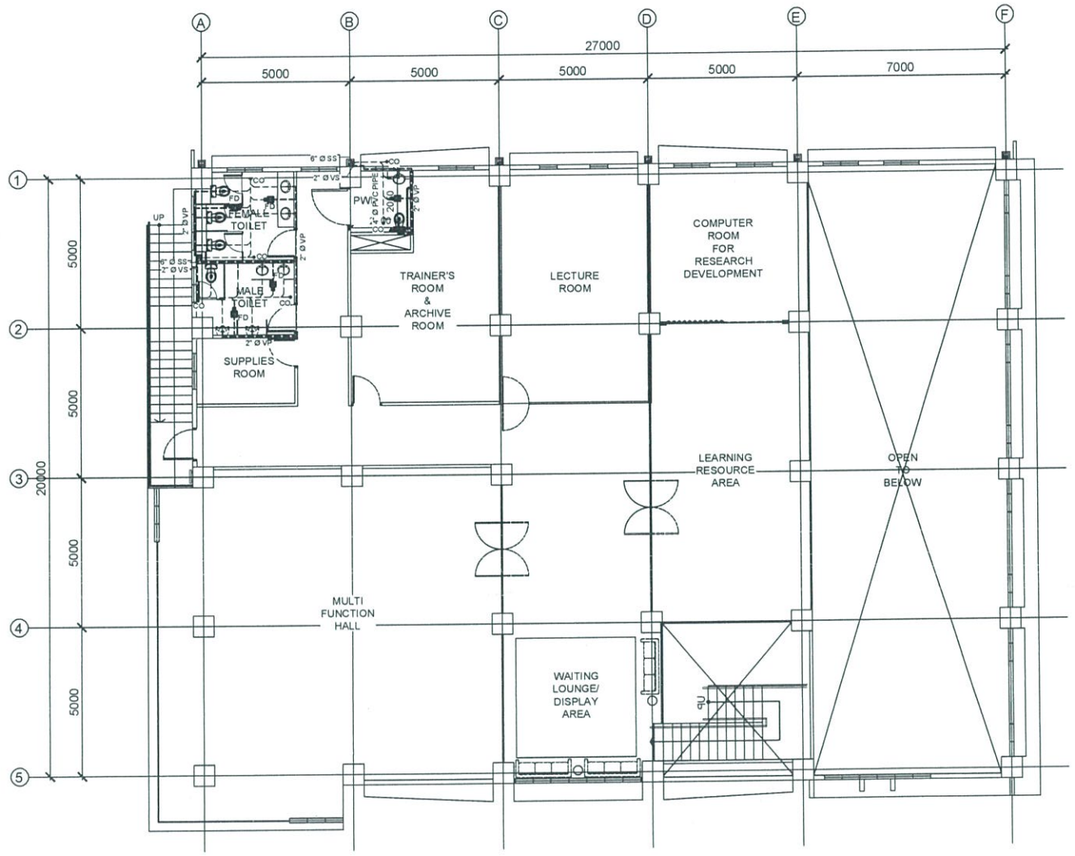

P

TESDA INNOVATION CENTER-RTC BATANGAS

SECOND FLOOR SANITARY LAYOUT

SCALE 1:200MTS

FOR APPROVAL PLANS OF REGIONAL TVET INNOVATION CENTERS (RTICs) 2023	PROJECT OWNER: TECHNICAL EDUCATION AND SKILLS DEVELOPMENT AUTHORITY MAIN OFFICE ADDRESS: TESDA COMPLEX, East Service Road SLEX, Taguig City	PROJECT TITLE: PROPOSED TESDA RTC BATANGAS INNOVATION CENTER LOCATION: P.HERERA, ST., POBLACION 0006 BATANGAS CITY	PREPARED & CADD BY: AR. RUNIEL A. MENDOZA, HEAD, PMU-SIPTVETS ENGINEERING SECTION	MASTER PLUMBER: ENGR. FRANCISCO B. NARAG, ASSISTANT PROFFESSOR IV, TESDA ISAT	PROJECT MANAGER: DIR. ENRICO C. BANARIO, PMU-SIPTVETS	PROJECT DIRECTOR: SEC. SUHARTO T. MANGUDADATU, Ph.D., PMU-SIPTVETS, SECRETARY, TESDA	SHEET CONTENTS: AS SHOWN	SHEET NO: P- 5

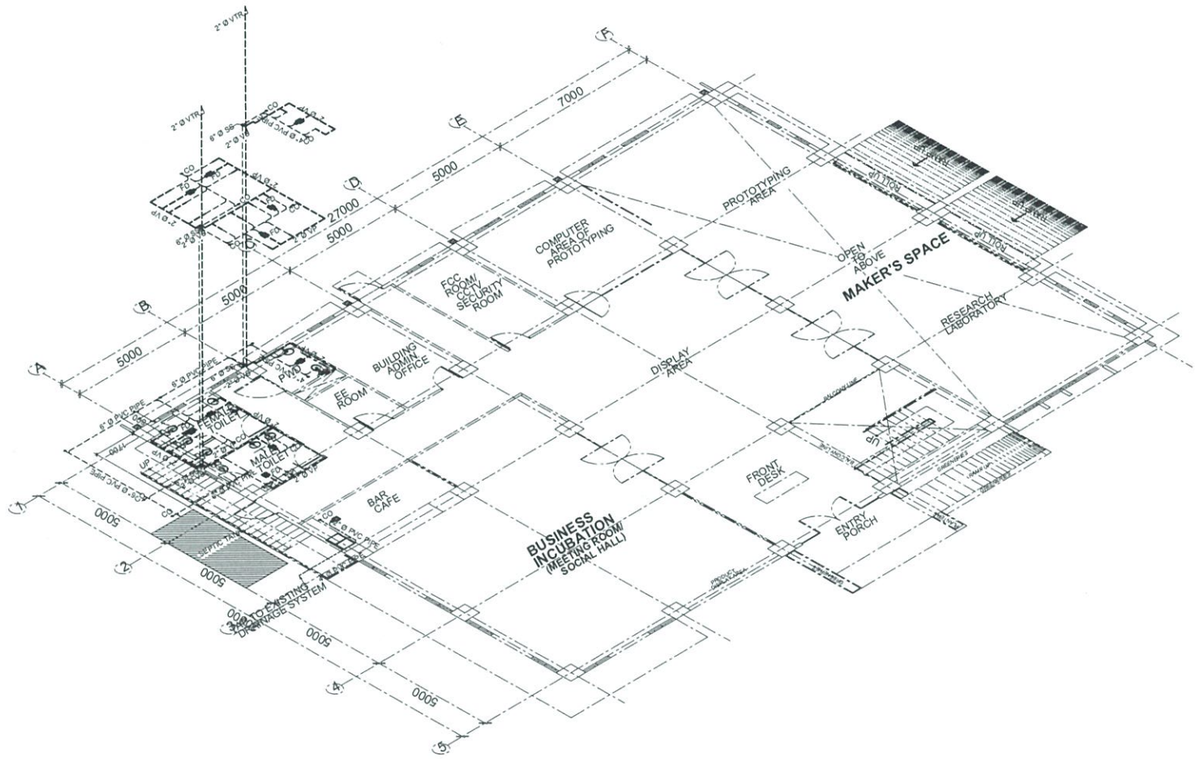

P

TESDA INNOVATION CENTER-RTC BATANGAS

SANITARY ISOMETRIC LAYOUT

SCALE 1:200MTS

FOR APPROVAL PLANS OF REGIONAL TVET INNOVATION CENTERS (RTICs) 2023	PROJECT OWNER: TECHNICAL EDUCATION AND SKILLS DEVELOPMENT AUTHORITY MAIN OFFICE ADDRESS: TESDA COMPLEX, East Service Road SLEX, Taguig City	PROJECT TITLE: PROPOSED TESDA RTC BATANGAS INNOVATION CENTER LOCATION: P.HERERA, ST. POBLACION 0006 BATANGAS CITY	PREPARED & CADD BY: AR. RUNIEL A. MENDOZA, HEAD, PMU-SIPTVETS ENGINEERING SECTION	MASTER PLUMBER: ENGR. FRANCISCO B. NARAG, ASSISTANT PROFFESSOR IV, TESDA ISAT	PROJECT MANAGER: DIR. ENRICO C. BANARIO, PMU-SIPTVETS	PROJECT DIRECTOR: SEC. SUHARTO T. MANGUDADATU, Ph.D., PMU-SIPTVETS, SECRETARY, TESDA	SHEET CONTENTS: AS SHOWN	SHEET NO: P- 6

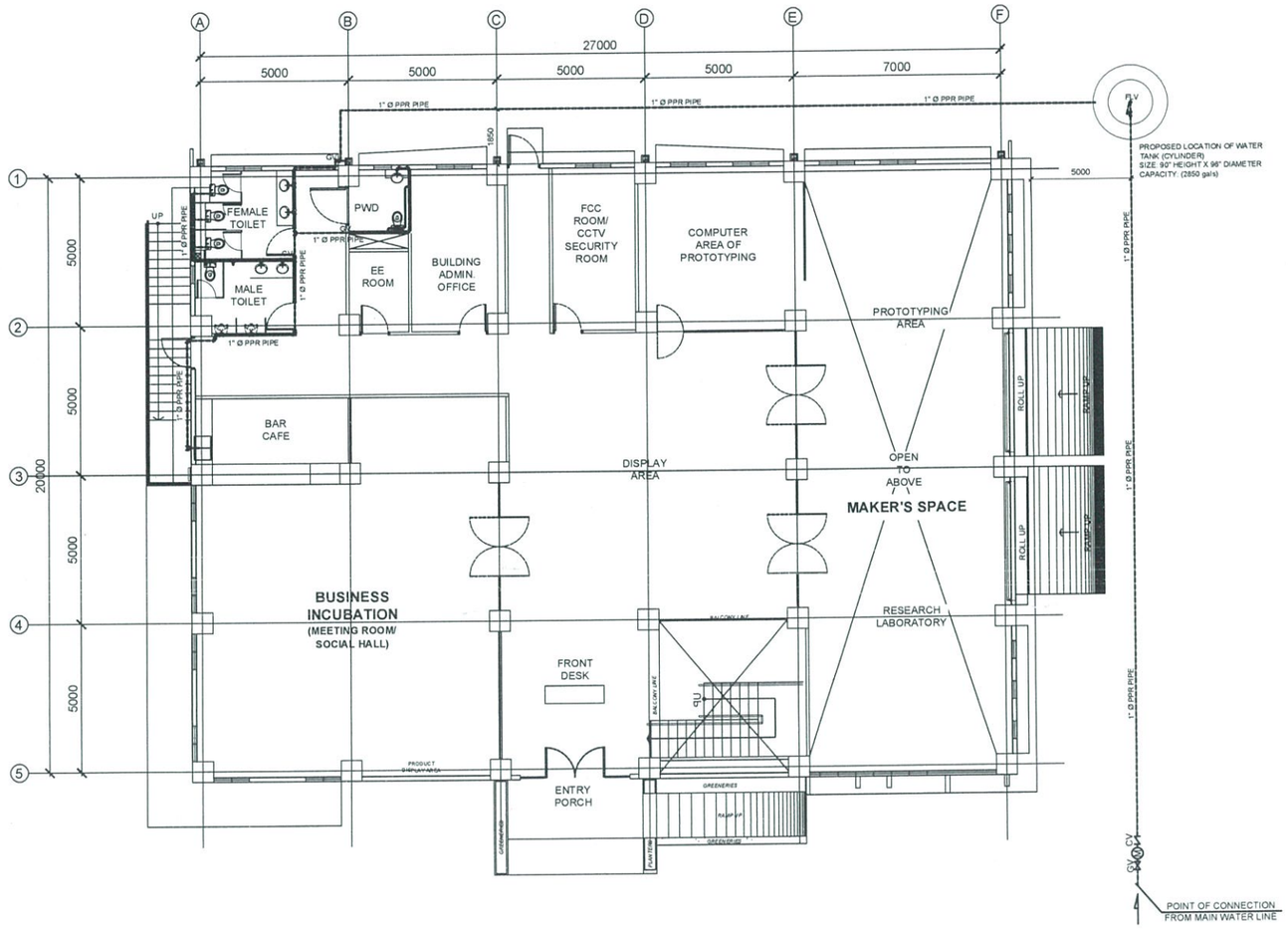

P

TESDA INNOVATION CENTER-RTC BATANGAS

GROUND FLOOR WATER LINE LAYOUT

SCALE 1:200MTS

FOR APPROVAL PLANS OF REGIONAL TVET INNOVATION CENTERS (RTICs) 2023

PROJECT OWNER:	PROJECT TITLE:	PREPARED & CADD BY:	MASTER PLUMBER:	PROJECT MANAGER:	PROJECT DIRECTOR:	SHEET CONTENTS:	SHEET NO.
TECHNICAL EDUCATION AND SKILLS DEVELOPMENT AUTHORITY MAIN OFFICE ADDRESS: TESDA COMPLEX, East Service Road SLEX, Taguig City	PROPOSED TESDA RTC BATANGAS INNOVATION CENTER LOCATION: P.HERERA, ST., POBLACION 0008 BATANGAS CITY	AR. RUNIEL A. MENDOZA HEAD, PMU-SIPTVETS ENGINEERING SECTION	ENGR. FRANCISCO B. NARAG ASSISTANT PROFFESSOR IV TESDA ISAT	DIR. ENRICO C. BANARIO PMU-SIPTVETS	SEC. SUHARTO T. MANGUDADATU, Ph.D. PMU-SIPTVETS SECRETARY, TESDA	AS SHOWN	P- 7

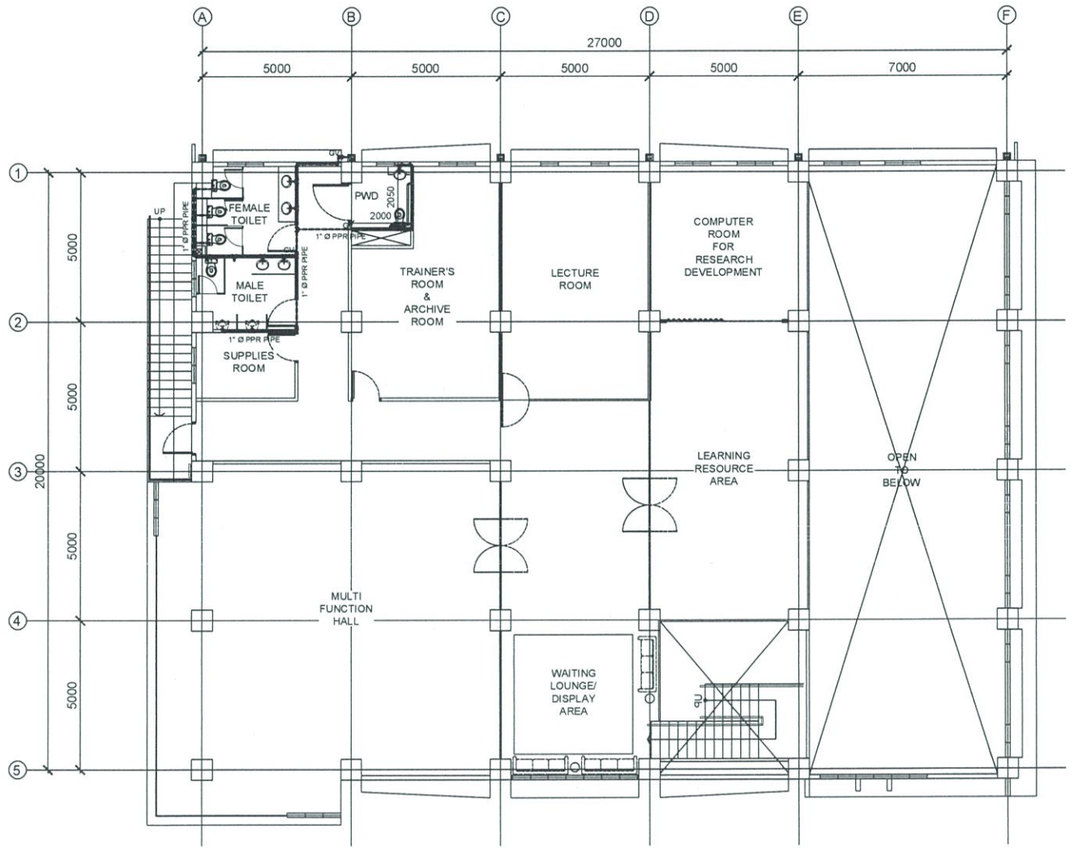

P

TESDA INNOVATION CENTER-RTC BATANGAS

SECOND FLOOR WATER LINE LAYOUT

SCALE 1:200MTS

FOR APPROVAL PLANS OF REGIONAL TVET INNOVATION CENTERS (RTICs) 2023	PROJECT OWNER: TECHNICAL EDUCATION AND SKILLS DEVELOPMENT AUTHORITY MAIN OFFICE ADDRESS: TESDA COMPLEX, East Service Road SLEX, Taguig City	PROJECT TITLE: PROPOSED TESDA RTC BATANGAS INNOVATION CENTER LOCATION: P.HERERA, ST. , POBLACION 0008 BATANGAS CITY	PREPARED & CADD BY: AR. RUNIEL A. MENDOZA, HEAD, PMU-SIPTVETS ENGINEERING SECTION	MASTER PLUMBER: ENGR. FRANCISCO B. NARAG, ASSISTANT PROFFESSOR IV, TESDA ISAT	PROJECT MANAGER: DIR. ENRICO C. BANARIO, PMU-SIPTVETS	PROJECT DIRECTOR: SEC. SUHARTO T. MANGUDADATU, Ph.D., PMU-SIPTVETS, SECRETARY, TESDA	SHEET CONTENTS: AS SHOWN	SHEET NO. P- 8

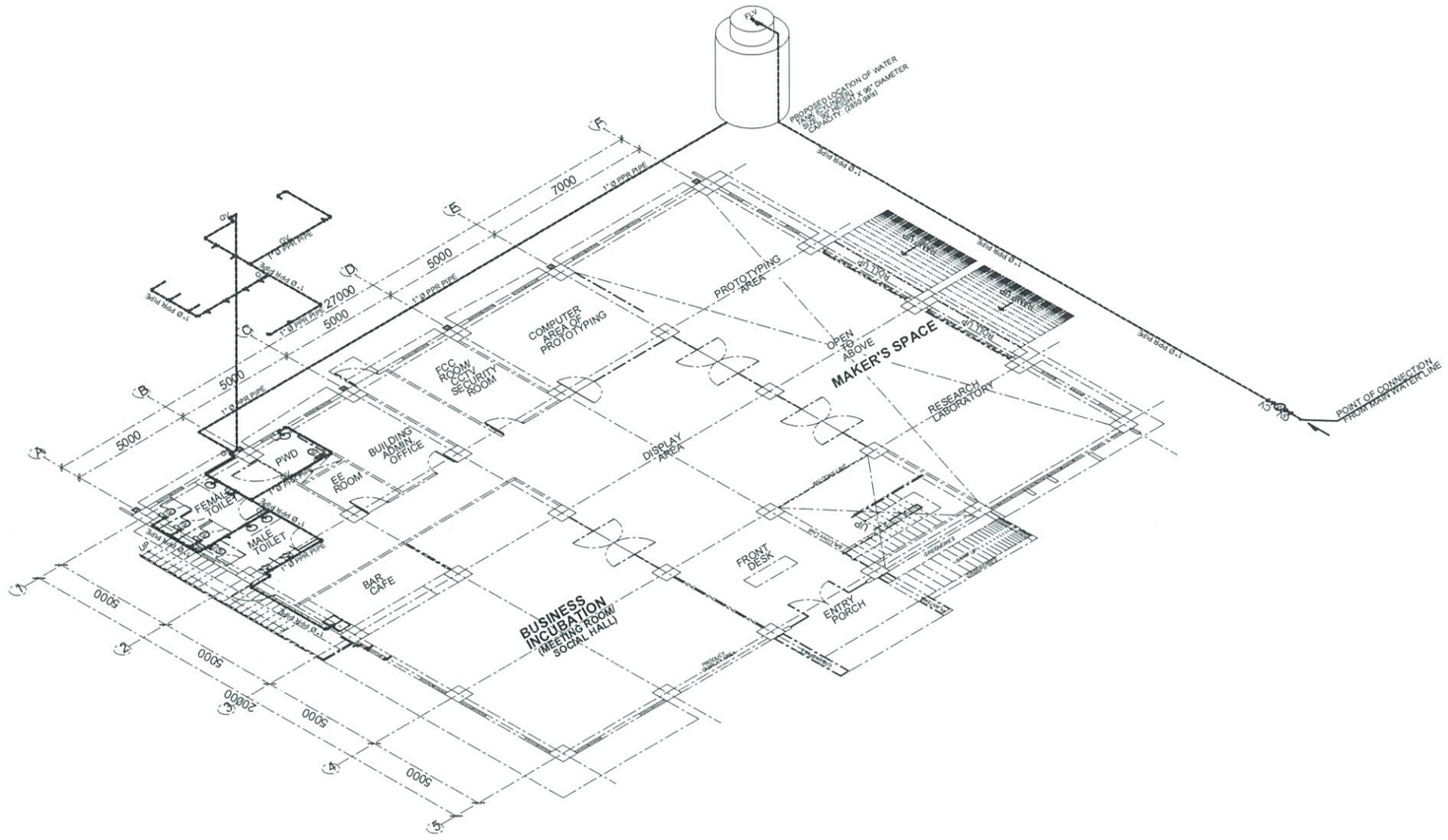

P

TESDA INNOVATION CENTER-RTC BATANGAS

WATER LINE ISOMETRIC LAYOUT

SCALE 1:200MTS

FOR APPROVAL PLANS OF REGIONAL TVET INNOVATION CENTERS (RTICs) 2023	PROJECT OWNER: TECHNICAL EDUCATION AND SKILLS DEVELOPMENT AUTHORITY MAIN OFFICE ADDRESS: TESDA COMPLEX, East Service Road SLEX, Taguig City	PROJECT TITLE: PROPOSED TESDA RTC BATANGAS INNOVATION CENTER LOCATION: P HERERA, ST., POBLACION 0096 BATANGAS CITY	PREPARED & CADD BY: AR. RUNIEL A. MENDOZA, HEAD, PMU-SIPTVETS ENGINEERING SECTION	MASTER PLUMBER: ENGR. FRANCISCO B. NARAG, ASSISTANT PROFFESSOR IV, TESDA ISAT	PROJECT MANAGER: DIR. ENRICO C. BANARIO, PMU-SIPTVETS	PROJECT DIRECTOR: SEC. SUHARTO T. MANGUDADATU, Ph.D., PMU-SIPTVETS SECRETARY, TESDA	SHEET CONTENTS: AS SHOWN	SHEET NO. P- 9

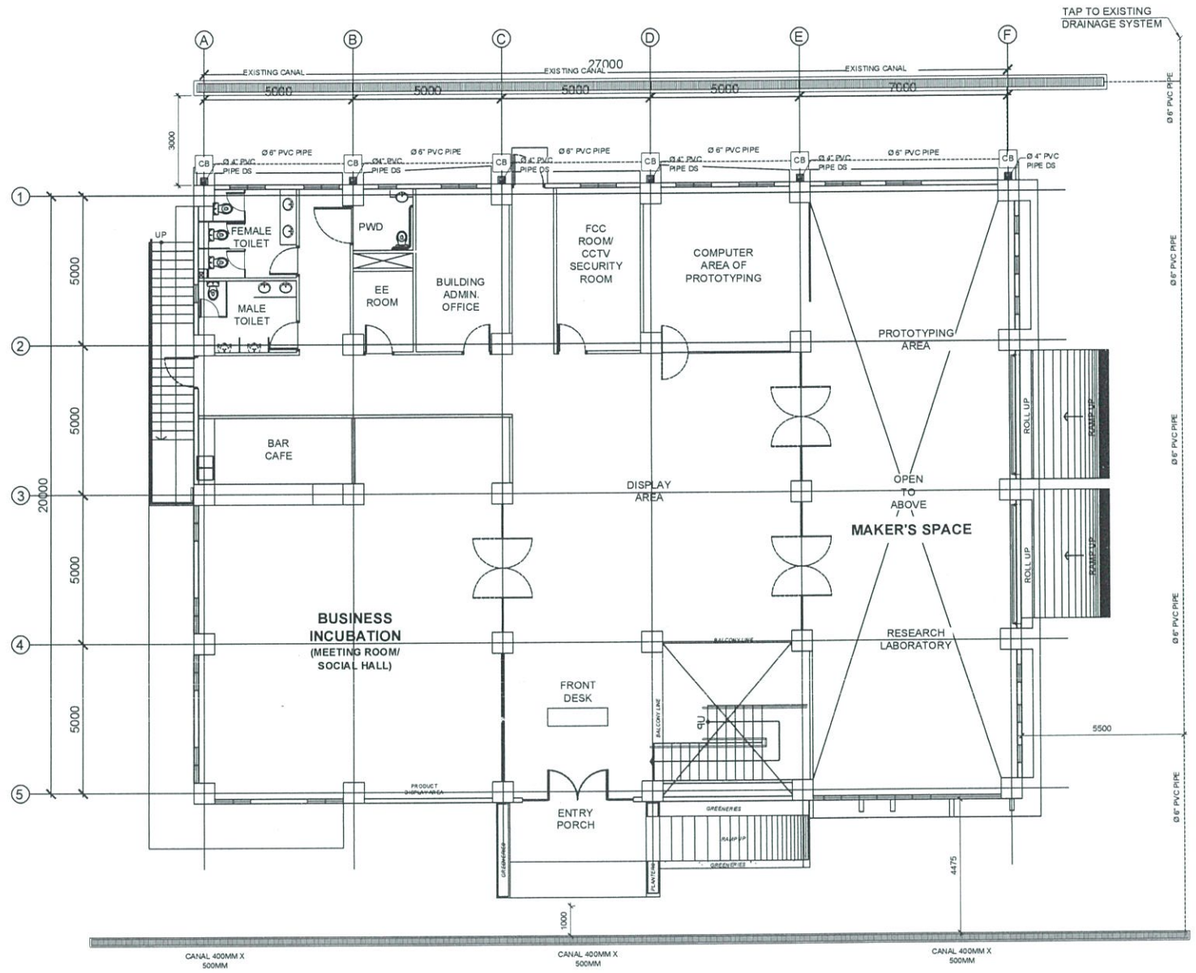

P

TESDA INNOVATION CENTER-RTC BATANGAS

GROUND FLOOR STORM WATER DRAINAGE LAYOUT

SCALE 1:200MTS

FOR APPROVAL PLANS OF REGIONAL TVET INNOVATION CENTERS (RTICs) 2023	PROJECT OWNER: TECHNICAL EDUCATION AND SKILLS DEVELOPMENT AUTHORITY MAIN OFFICE ADDRESS: TESDA COMPLEX, East Service Road SLEX, Taguig City	PROJECT TITLE: PROPOSED TESDA RTC BATANGAS INNOVATION CENTER LOCATION: P.HERERA, ST., POBLACION 0008 BATANGAS CITY	PREPARED & CADD BY: AR. RUNIEL A. MENDOZA, HEAD, PMU-SIPTVETS ENGINEERING SECTION	MASTER PLUMBER: ENGR. FRANCISCO B. NARAG, ASSISTANT PROFFESSOR IV, TESDA ISAT	PROJECT MANAGER: DIR. ENRICO C. BANARIO, PMU-SIPTVETS	PROJECT DIRECTOR: SEC. SUHARTO T. MANGUDADATU, Ph.D., PMU-SIPTVETS SECRETARY, TESDA	SHEET CONTENTS: AS SHOWN	SHEET NO. P- 10

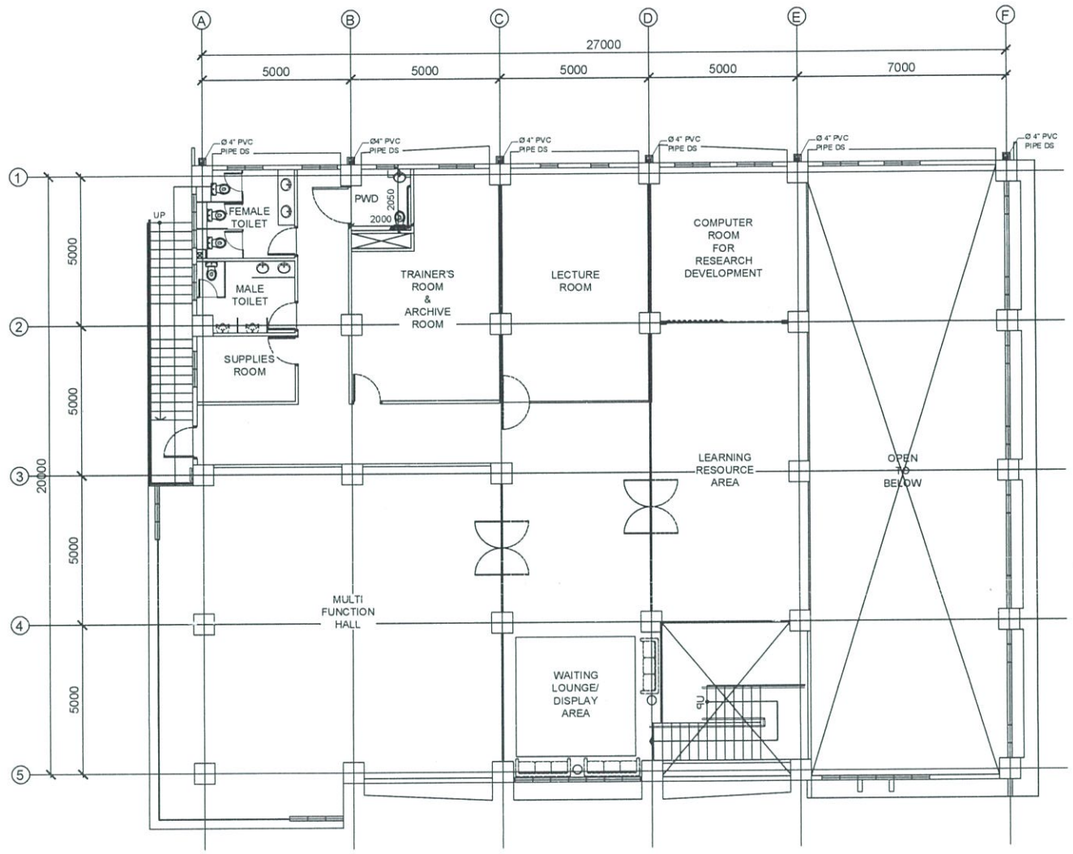

P

TESDA INNOVATION CENTER-RTC BATANGAS

SECOND FLOOR STORM WATER DRAINAGE LAYOUT

SCALE 1:200MTS

FOR APPROVAL PLANS OF REGIONAL TVET INNOVATION CENTERS (RTICs) 2023

PROJECT OWNER:	PROJECT TITLE:	PREPARED & CADD BY:	MASTER PLUMBER:	PROJECT MANAGER:	PROJECT DIRECTOR:	SHEET CONTENTS:	SHEET NO.
TECHNICAL EDUCATION AND SKILLS DEVELOPMENT AUTHORITY	PROPOSED TESDA RTC BATANGAS INNOVATION CENTER	AR. RUNIEL A. MENDOZA HEAD, PMU-SIPTVETS ENGINEERING SECTION	ENGR. FRANCISCO B. NARAG ASSISTANT PROFFESSOR IV TESDA ISAT	DIR. ENRICO C. BANARIO PMU-SIPTVETS	SEC. SUHARTO T. MANGUDADATU, Ph.D. PMU-SIPTVETS SECRETARY, TESDA	AS SHOWN	P- 11
MAIN OFFICE ADDRESS: TESDA COMPLEX, East Service Road SLEX, Taguig City	LOCATION: P HERERA, ST., POBLACION 0006 BATANGAS CITY						

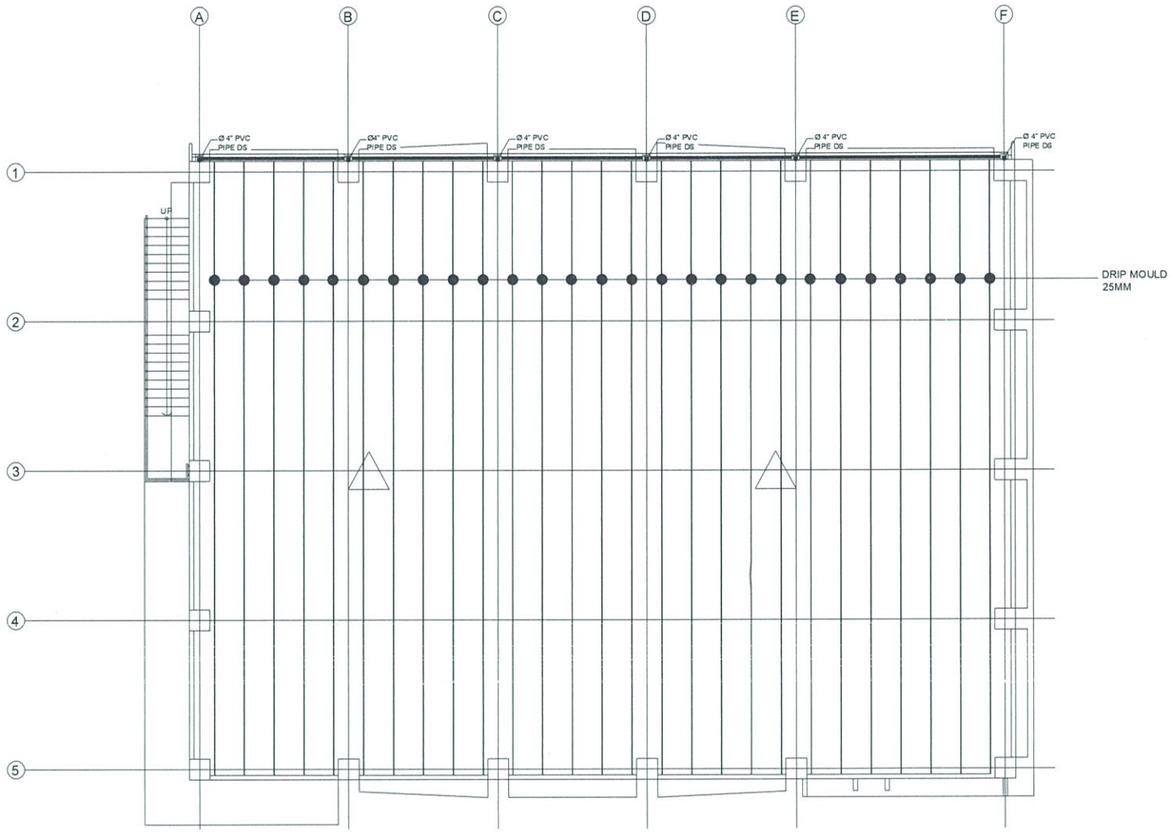

P

TESDA INNOVATION CENTER-RTC BATANGAS

ROOF DECK STORM WATER DRAINAGE LAYOUT

SCALE 1:200MTS

FOR APPROVAL PLANS OF REGIONAL TVET INNOVATION CENTERS (RTICs) 2023

PROJECT OWNER:	PROJECT TITLE:	PREPARED & CADD BY:	MASTER PLUMBER:	PROJECT MANAGER:	PROJECT DIRECTOR:	SHEET CONTENTS:	SHEET NO.
TECHNICAL EDUCATION AND SKILLS DEVELOPMENT AUTHORITY MAIN OFFICE ADDRESS: TESDA COMPLEX, East Service Road SLEX Taguig City	PROPOSED TESDA RTC BATANGAS INNOVATION CENTER LOCATION: P.HERERA, ST., POBLACION 0008 BATANGAS CITY	AR. RUNIEL A. MENDOZA HEAD, PMU-SIPTVETS ENGINEERING SECTION	ENGR. FRANCISCO B. NARAG ASSISTANT PROFFESSOR IV TESDA ISAT	DIR. ENRICO C. BANARIO PMU-SIPTVETS	SEC. SUHARTO T. MANGUDADATU, Ph.D. PMU-SIPTVETS SECRETARY, TESDA	AS SHOWN	P- 12

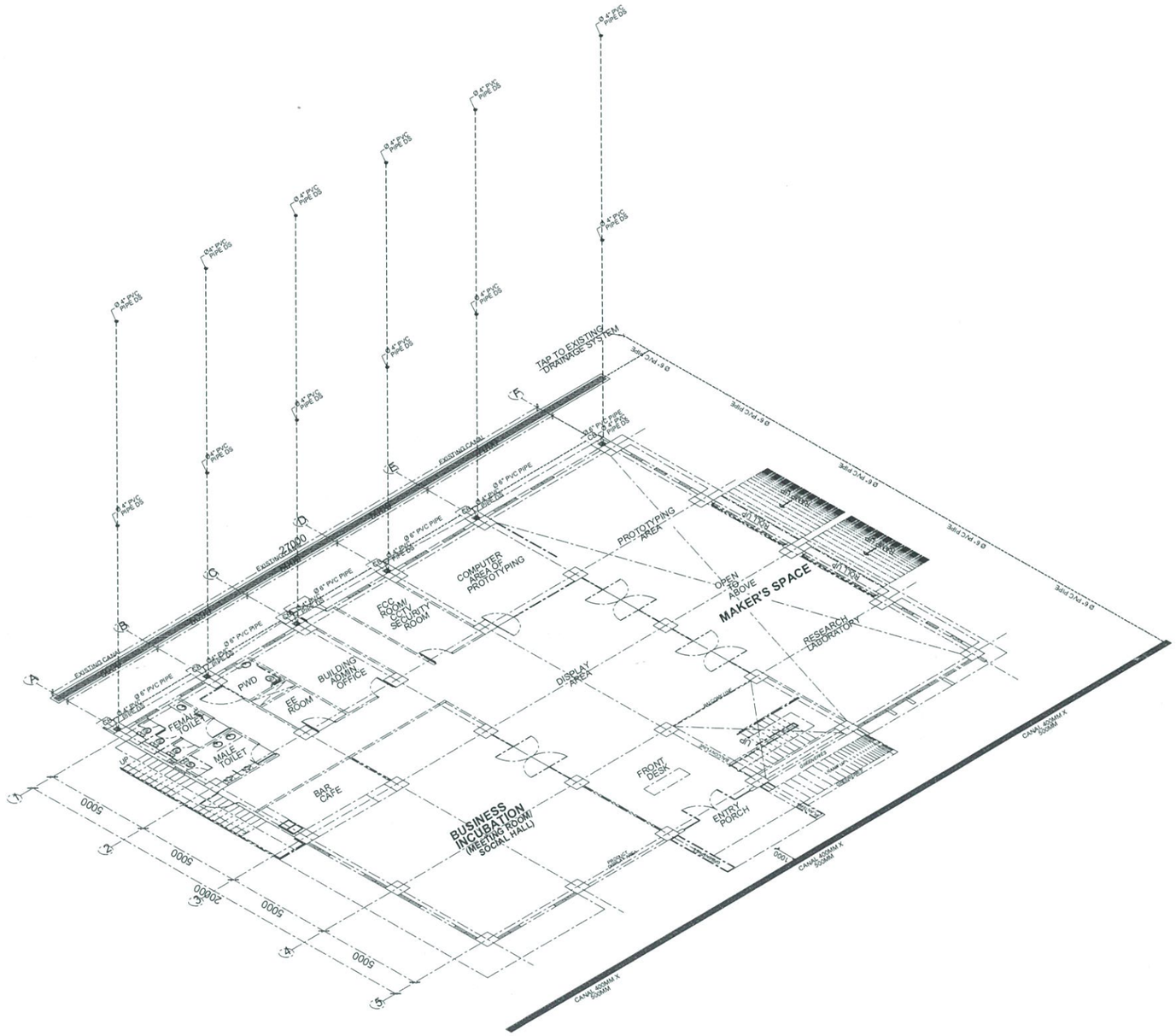

P

TESDA INNOVATION CENTER-RTC BATANGAS

STORM WATER DRAINAGE ISOMETRIC LAYOUT

SCALE 1:200MTS

FOR APPROVAL PLANS OF REGIONAL TVET INNOVATION CENTERS (RTICs) 2023	PROJECT OWNER: TECHNICAL EDUCATION AND SKILLS DEVELOPMENT AUTHORITY MAIN OFFICE ADDRESS: TESDA COMPLEX, East Service Road SLEX, Taguig City	PROJECT TITLE: PROPOSED TESDA RTC BATANGAS INNOVATION CENTER LOCATION: P.HERERA, ST., POBLACION 0006 BATANGAS CITY	PREPARED & CADD BY: AR. RUNIEL A. MENDOZA, HEAD, PMU-SIPTVETS ENGINEERING SECTION	MASTER PLUMBER: ENGR. FRANCISCO B. NARAG, ASSISTANT PROFFESSOR IV, TESDA ISAT	PROJECT MANAGER: DIR. ENRICO C. BANARIO, PMU-SIPTVETS	PROJECT DIRECTOR: SEC. SUHARTO T. MANGUDADATU, Ph.D., PMU-SIPTVETS, SECRETARY, TESDA	SHEET CONTENTS: AS SHOWN	SHEET NO. P- 13